DESIGN AND CONSTRUCTION

OF

AN ENVIRONMENTAL CHAMBER

ENABLING ELECTRICAL AND ELECTRO-OPTIC MEASUREMENTS

by

Barlas ÇAĞLAYAN

Submitted to the Faculty of Engineering
in Partial Fulfillment for the
Requirements of the Degree of
MASTER OF SCIENCE
in
ELECTRICAL ENGINEERING

Boğaziçi Üniversitesi
1982

to my parents and my wife Gülsun

A C K N O W L E D G E M E N T S

I would like to express my sincere gratitude to my thesis supervisor Doç. Dr. Yani SKARLATOS for his guidance, encouragement and invaluable suggestions during my study.

I would like to thank Prof. Dr. Sabih TANSAL and Dr. Yekta ÜLGEN for their valuable suggestions that have improved the presentation.

I am grateful to Gülsun, my wife, for the understanding and encouragement she has shown me, and also for her typing of the material.

ABSTRACT

Measurements of electric field dependence of conductivity of semiconductor thin films are very important in understanding the electrical characteristics of these materials. In these measurements it is necessary to use a chamber whose temperature can be kept constant for a desired period of time.

In this thesis, design and construction of an environmental chamber enabling electrical and electro-optic measurements are considered, and special emphasis is given on platinum resistance thermometry and temperature control.

Power dissipation type temperature control is employed, and fully electronic temperature control is accomplished in two stages. Temperature excursions are 0.5 ^{o}C at the most in the temperature range of -190 ^{o}C to 600 ^{o}C.

Ö Z E T Ç E

Yarıiletken ince film tabakalarının elektriksel özelliklerini belirlemek açısından bu maddelerin elektrik alan bağımlılıklarının ve fotoiletkenliğinin çeşitli sıcaklıklarda ölçülmesi önem taşımaktadır. Bu ölçümlerin yapılması sırasında sıcaklığın istenilen bir kademede sabit tutulmasını sağlayan bir düzenekte bir denek tutucusu gerekmektedir.

Bu tez çalışmasında, elektrik ve elektro-optik ölçümler yapılmasına olanak sağlayan bir düzeneğin tasarımı ve yapımı ele alınmıştır. Çalışmanın büyük bir kısmı platin direnç ile sıcaklık ölçümü ve sıcaklık denetimine ayrılmıştır.

Sıcaklık, güç harcama denetimi yöntemiyle, tümü elektronik olan bir devreyle iki kademede denetlenmektedir. Sıcaklık denetim alanı -190 ^{o}C ile 600 ^{o}C olup, istenilen sıcaklıktan sapma en çok 0.5 ^{o}C dir.

TABLE OF CONTENTS

	Page
ACKNOWLEDGEMENTS	iv
ABSTRACT	v
ÖZETÇE	vi
INTRODUCTION	vii
CHAPTER 1 - THE ENVIRONMENTAL CHAMBER	1
1.1 Properties of the Chamber	1
1.2 Description of the Parts of the Chamber	2
CHAPTER 2 - TEMPERATURE SENSING	7
2.1 Introduction to Temperature Sensors	7
2.1.1 Resistance Thermometers	7
2.1.2 Thermocouples	9
2.2 Platinum Resistance as a Temperature Sensor	9
2.3 Thermocouple Temperature Sensor	16
CHAPTER 3 - TEMPERATURE MEASUREMENT AND CONTROL	18
3.1 Temperature Control by Power Dissipation Control	18
3.2 Platinum Resistance Temperature Measurement and Control Unit	20
3.2.1 Platinum Resistance Temperature Measurement	21
3.2.2 Aplification, Error Generation and Control	23
3.2.3 Power Switching	27
3.3 Thermocouple Temperature Measurement and Control Unit	29
CHAPTER 4 - USER'S MANUAL	32
CHAPTER 5 - CONCLUSIONS	33

APPENDIX A 35
APPENDIX B 40
APPENDIX C 42
APPENDIX D 46
APPENDIX E 47
APPENDIX F 48
REFERENCES 70

INTRODUCTION

In the Physics Department research on amorphous silicon is conducted to formulate the density of localized states in the forbidden band as a function of energy, and to eliminate these states by various methods in order to obtain an electronic configuration similar to that of an intrinsic semiconductor. In short, the aim is to obtain amorphous silicon films that can be doped and can have technological applications.

The two widely used methods to determine the density of localized states in amorphous silicon samples are,

1- The application of Mott's $T^{-1/4}$ theory based on the assumption that the dominant contribution to the dc conductivity below room temperature is due to the hopping of carriers between the localized states.

2- The measurement of the contribution to ac conductivity of the density of localized states in an electric field of variable frequency.

The reliability and the results of these methods are still controvertial. However in this research a different method using the 'phase-shift in the modulated photocurrent' will be applied. [1]

According to Mott's variable range hopping conductance theory, the conductivity is given by

$$\sigma = \sigma_o \exp [-T_o/T]^{1/4}$$

where

$$T_o = \frac{18\alpha^3}{N(E_F)\ k}$$

and

$$\sigma_o = \nu e^2 N R^2$$

and

$N = N(E_F)$: density of localized states around the Fermi level

T : temperature in ^oK

e : elementary charge

k : Boltzmann's constant

ν : phonon frequency

α^{-1} : time constant of the localized wave function

R : radial distance.

σ can be calculated from the Apsley-Hughes model which relates variable range hopping conduction to the applied electric field as

$$\sigma(T,\beta) = \frac{Ne^2\nu}{2\alpha^2}\left(\frac{24\alpha^3}{NkT}\right)^{1/4} \exp\left[-\left(\frac{24\alpha^3}{NkT}\right)^{1/4}\left[1-\frac{\beta^2}{4}\right]\right]$$

for small electric fields,

where $\beta = \frac{Fe}{2\alpha kT}$

and F is the applied electric field.

Under these conditions $\ln\sigma$ vs F^2 is a straight line at a constant temperature T and under a suitable electric field F.If the slopes of $\ln\sigma$ vs $T^{-1/4}$ and $\ln\sigma$ vs F^2 are solved simultaneously, α^{-1} and $N(E_F)$ can be obtained independently. To accomplish this, one should be able to keep the temperature of the sample constant, for a desired period of time, while electric and electro-optic measurements are made on this sample.

In this thesis the design and construction of a chamber comprising a sample holder, whose temperature can be regulated electronically, is considered.

In the first chapter, the parts of the chamber are described.

Temperature sensors applicable in the temperature range of -190 °C to 600 °C are introduced in the second chapter and the calibration of platinum resistance temperature detectors are discussed.

In the third chapter, the electronic temperature measurement and control circuitry are described.

The fourth chapter, which is the user's manual, explains how the chamber and the measurement and control units are used.

The last chapter discusses briefly what has been done in this study and suggests topics for further research.

CHAPTER 1

THE ENVIRONMENTAL CHAMBER

1.1. PROPERTIES OF THE CHAMBER

The chamber designed and constructed possesses the capability of keeping the temperature of a sample within the chamber constant, while electrical and electro-optic measurements are performed on this sample.

The temperature of the sample can be kept constant within a temperature range of -190 to 600 ^{o}C, with maximum temperature excursions of 0.5 ^{o}C, for a desired period of time.

The chamber is so constructed that it can be evacuated; primarily to eliminate the condensation of water vapor on the sample at low temperatures and the oxidizing effect of the atmosphere at high temperatures, and to reduce heat transfer from the chamber to its surroundings and vice versa.

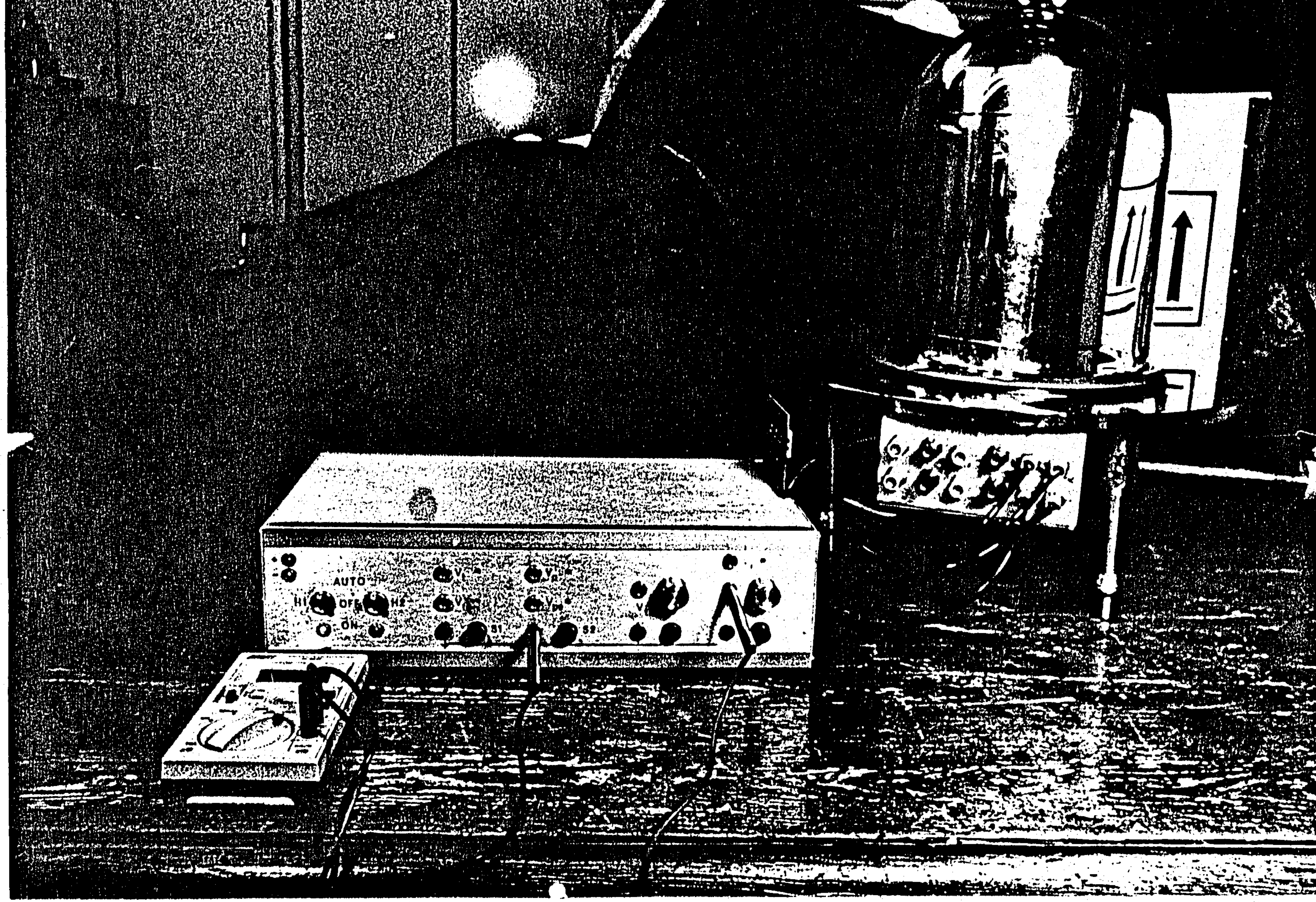

THE CHAMBER AND THE TEMPERATURE MEASUREMENT AND CONTROL UNIT.

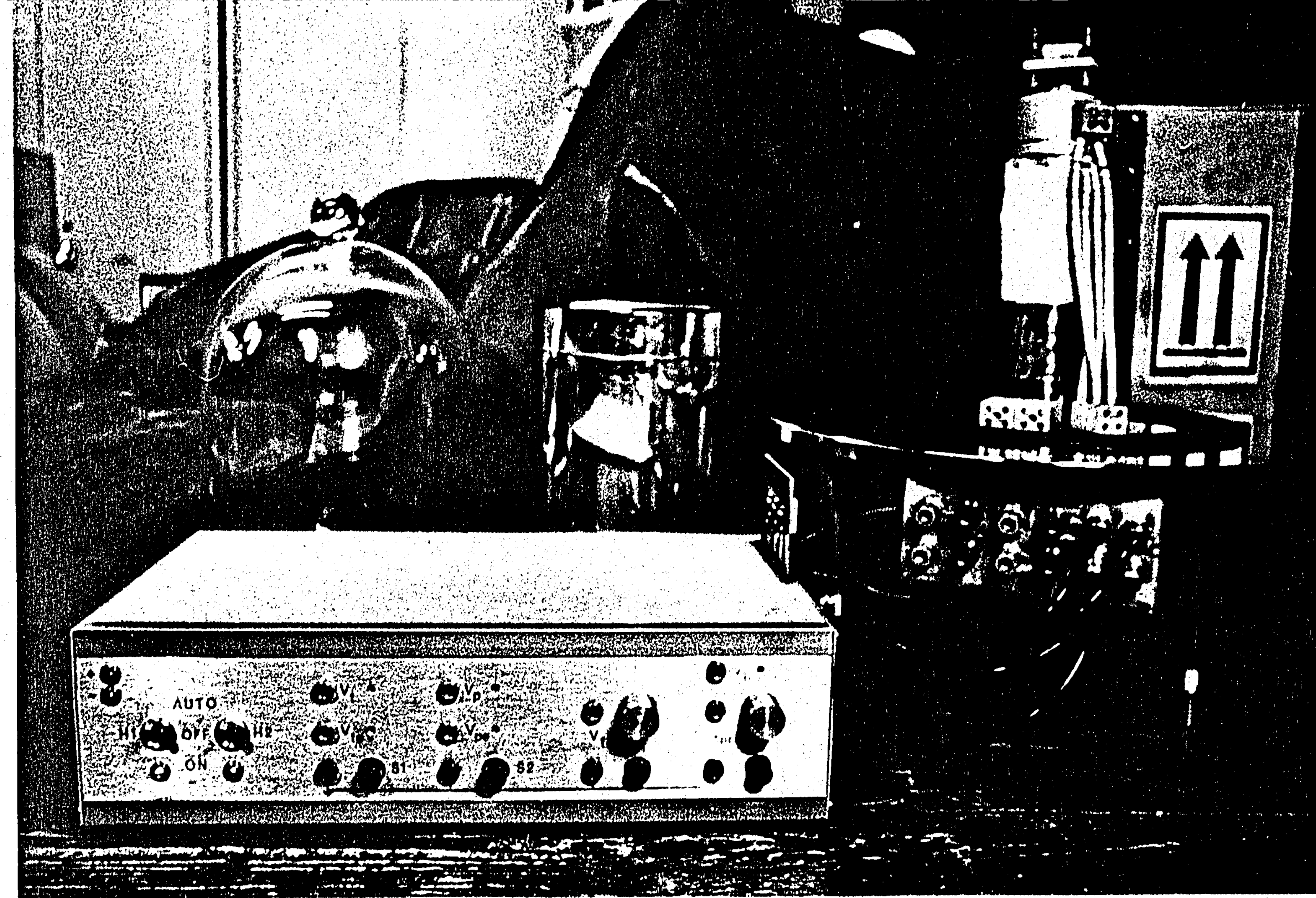

THE CHAMBER AND THE TEMPERATURE MEASUREMENT AND CONTROL UNIT WITH COVER AND HEAT SHIELD REMOVE

1.2. DESCRIPTION OF THE PARTS OF THE CHAMBER

The schematic of the chamber constructed is shown in FIGURE 1.1. The main parts of the chamber are:

- the base

  The base of the chamber is made of iron. It has been nickel plated after the nitrogen tank and the 'pump out' pipes were brazed on. Also 'feed throughs' have been drilled before the plating. Copper conductors are embedded in epoxy in these holes to provide for electrical connection between the inside and the outside of the chamber.

- the nitrogen tank

  The nitrogen tank is made of copper, and a pair of stainless steel pipes provide nitrogen flow, while another pair acts as support.

- the main heater

  The main heater, placed on the nitrogen tank, is formed of a solid cylinder of copper. The surface of the cylinder is covered with porcelain and a nickel-chromium tape is sandwiched between this layer and another layer of porcelain. The nickel-chromium tape is 2.4 meters long and has a resistance of 8.31 ohms per meter at room temperature. Thus the heater can supply power of about 600 watts, which is approximately equal to 144 calories per second.

- the thermocouple unit

  A chromel-alumel thermocouple embedded in a copper disk with porcelain insulation forms the thermocouple unit which is situated on the main heater. The thermocouple unit and the main heater constitute the preparatory stage.

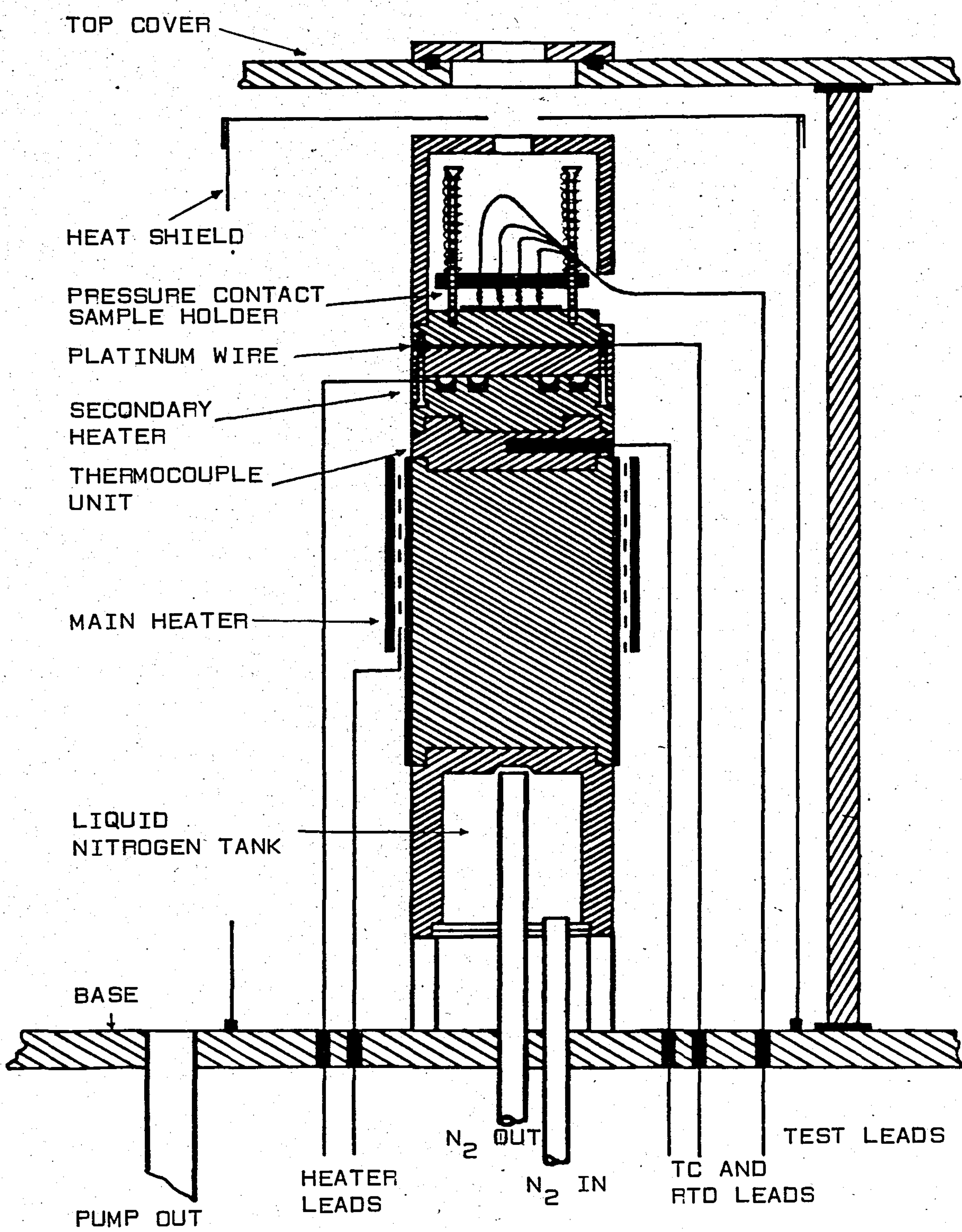

FIGURE 1.1

SCHEMATIC DIAGRAM OF THE ENVIRONMENTAL CHAMBER.

- the platinum unit

Above the thermocouple unit is the platinum unit that contains the platinum wire, the secondary heater and, the base of the sample holder.
The platinum wire of 70 μm diameter and of 0.57 m length is mounted on a copper disk having grooves 1 mm deep and 1 mm wide (FIGURE 1.2). The grooves have been first partly insulated with enamel, and the platinum wire was sandwiched between this enamel layer and a layer of porcelain. Although the platinum resistance is subject to strains in this type of mounting, thermal lag is smaller with respect to the alternative method where the platinum resistance is mounted as strain free as possible and hermetically sealed.
The secondary heater is a 120 watts nickel-chromium wire embedded in the grooves on a copper disk between a layer of enamel and a layer of porcelain.
The base of the sample holder, the disk containing the platinum wire, and the secondary heater were fastened together with two screws and then annealed at about 700 ^{o}C for 45 minutes before calibration. (If for any reason the unit is disassembled; upon reassembling, the platinum resistance must be annealed within the unit and calibrated again).

- the sample holder

The sample holder (FIGURE 1.3) is mounted on the platinum unit with the aid of four screws holding a ceramic plate which carries the pressure contacts.
Between the screw heads and the ceramic plate are four springs that push the plate down and cause the contacts to press upon the sample.
An inverted cup like cover acts as a heat shield around the sample holder. The cover has a hole at the top to enable optical experiments.

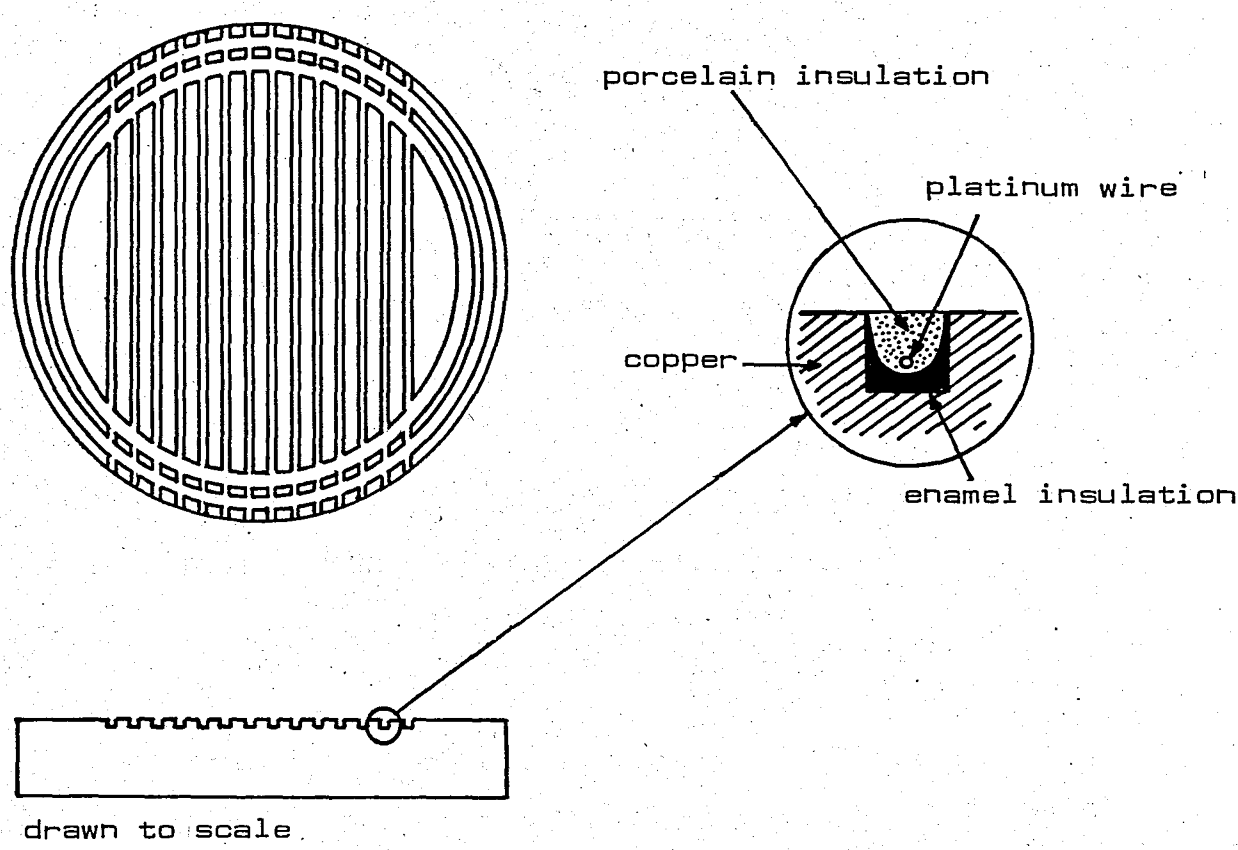

FIGURE 1.2

MOUNTING OF THE PLATINUM WIRE.

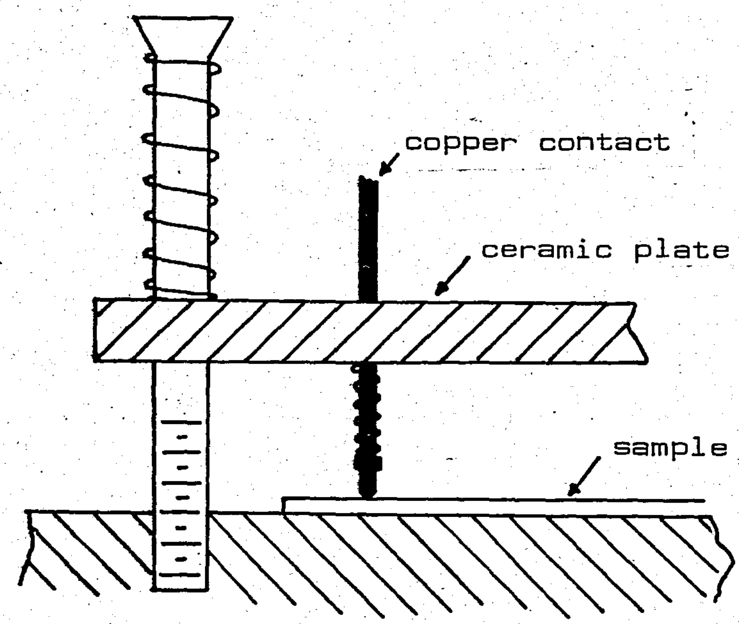

FIGURE 1.3

SCHEMATIC DIAGRAM OF THE SAMPLE HOLDER.

- the heat shield

  A stainless steel plate was shaped into a cylinder around the copper units to function as a heat shield. The shield stands on porcelain thermal insulators.

- the final enclosure

  A pyrex cylinder and a top cover constitute the final enclosure. The pyrex cylinder can withstand pressures in excess of one atmosphere. The top cover is a nickel plated iron disk on which a saphire 'window' can be mounted.

CHAPTER 2

TEMPERATURE SENSING

2.1. INTRODUCTION TO TEMPERATURE SENSORS

The choice of a temperature transducer for a particular application is dependent upon many factors, including the absolute temperature to be measured, the temperature span required, the desired accuracy and sensitivity, the speed of response required, the space available for the transducer, pressure and corrosive conditions at the point of measurement, and whether the element whose temperature is to be measured is stationary or in motion.

2.1.1. Resistance Thermometers

Resistance thermometers provide absolute temperatures in the sense that no reference junctions are involved, and no special extension wires are needed to connect the sensor to the measuring instrument. The basic characteristics of resistance thermometers are:

- simplicity of circuits,
- sensitivity of measurements,
- stability of sensors.

The sensors can be divided conveniently into two basic groups: resistance temperature detectors (RTDs) and thermistors.

RTDs are electrical circuit elements formed of solid conductors (usually in wire form) that are characterized by a positive coefficient of resistivity. The RTDs of general usage are of platinum, nickel, and copper. Platinum,being a noble metal, is used exclusively for precision resistance thermometers. Platinum is stable (i.e., it is relatively indifferent to its environment, it resists corrosion and chemical attack, and it is not readily oxidized), has a high melting point (i.e., it shows little volatization below 1000 ^{o}C), and can be obtained to a high degree of purity (i.e., it has reproducable electrical and chemical characteristics).
In the text of IPTS-1968, platinum resistance thermometers are defined as standard interpolation instruments for realizing the scale from -259.34 to 630.74 ^{o}C.
Nickel and copper sensors are much cheaper than the platinum sensors. However nickel is appreciably nonlinear and has an upper temperature limit of about 315 ^{o}C. Copper is quite linear, but is limited to about 120 ^{o}C, and has such a low resistance that very accurate measurements are required. [2],[3]

Thermistors (thermally sensitive resistors) are electrical circuit elements formed of solid semiconducting materials that are characterized by a high negative coefficient of resistivity.
At any temperature, a thermistor acts as any ohmic conductor. If its temperature is permitted to change, however, either as a result of a change in ambient conditions or because of a dissipation of electrical power in it, the resistance of the thermistor is a definite,

reproducible function of temperature. The practical range for which thermistors are useful is from the ice point to about 315 °C.[4]

2.1.2. Thermocouples

The thermoelectric circuit in which an emf is produced by subjecting the junctions of dissimilar metallic combinations to different temperatures is extensively used in both scientific and industrial thermometry. In circumstances where measurement accuracy is about 0.5 °C, a thermocouple may even be the preferred temperature-sensing element. There are several reasons for this. A thermocouple is easily made, is small, and can be mounted relatively simply in remote and fairly inaccessible locations; it requires only standard or industrial measuring instruments; and is inexpensive.[4]

2.2. Platinum Resistance as a Temperature Sensor

The variation of electrical resistance with temperature provides a very convenient, accurate and practical method for temperature measurement. This method is enhanced when the material from which the thermometer is made has a stable and easily reproducible composition.

In the International Practical Temperature Scale of 1968 (IPTS-68) the resistance-temperature (R-T) relation of the platinum thermometer is determined from interpolating formulas and resistance measurements at defining fixed points. The eleven defining fixed points are established by realizing specified equilibrium states between phases of pure substances. Below 0 °C the R-T relation of the thermometer is found from a reference function and specified deviation polynomials. From 0 °C to 630.74 °C a quadratic interpolation formula plus a correction function provide the R-T relation. [2],[4]

In the IPTS-48 (1960 text revision of ITS-48) the interpolating equations for the platinum resistance thermometers are;

the Callendar formula for the range 0 °C to 630.5 °C,

$$T = \left[\frac{R_T - R_o}{R_{100} - R_o}\right]100 + \delta\left[\frac{T}{100} - 1\right]\left[\frac{T}{100}\right] \qquad 2.1$$

and the Callendar-VanDusen equation for the range -182.97 °C to 0 °C,

$$T = \left[\frac{R_T - R_o}{R_{100} - R_o}\right]100 + \delta\left[\frac{T}{100} - 1\right]\left[\frac{T}{100}\right] + \beta\left[\frac{T}{100} - 1\right]\left[\frac{T}{100}\right]^3 \qquad 2.2$$

where

T : temperature in °C,
R_T : platinum resistance at temperature T,
R_o : measured resistance at the triple point of H_2O,
R_{100} : measured resistance at the normal boiling point of H_2O,
δ : Callendar constant, determined from the data at the normal boiling point of sulphur,
β : VanDusen constant, determined from the data at the normal boiling point of oxygen.

A platinum resistance thermometer calibrated in accordance with the IPTS-68, will have a best reproducibility of 10^{-4} °C and an accuracy of 10^{-4} °C, but the requirements of the IPTS-68 are not within our limits. Thus the IPTS-48 constituted the base of the platinum resistance thermometer constructed.

One can rewrite Equation 2.1 and Equation 2.2 so that the resistance of the platinum wire is a function of temperature as:

$$R(T) = R_o + AT + BT^2 \qquad 2.3$$

for the 0 °C to 630.5 °C range

and

$$R(T) = R_o + AT + BT^2 + C(T-100)T^3 \qquad 2.4$$

for the -185.97 °C to 0 °C range

where

T : temperature in °C,
$R(T)$: platinum resistance at temperature T,
R_o : measured resistance at the ice point,
A,B,C : constants determined from constant temperature baths.

TABLE 2.1 shows the constant temperature baths performed and the corresponding absolute resistances of the platinum unit obtained using the experimental set up shown in FIGURE 2.1. With these values, the constants of Equation 2.3 and Equation 2.4 were determined to be:

Throughout the experiment voltage across the platinum resistance unit was kept constant at 0.125 V.

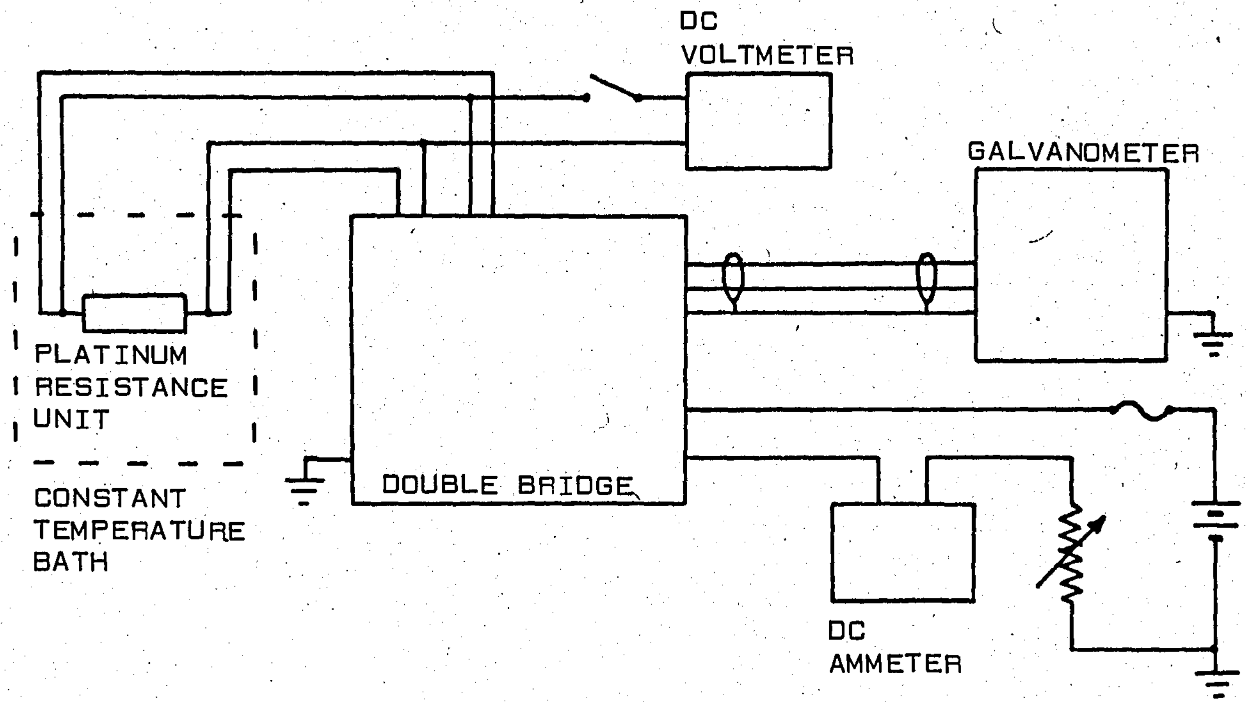

FIGURE 2.1

EXPERIMENTAL SETUP USED FOR THE MEASUREMENT OF PLATINUM RESISTANCE.

$$A = 6.36407 \times 10^{-2} \quad 1/^{o}C$$

$$B = 3.53323 \times 10^{-6} \quad 1/(^{o}C)^{2}$$

$$C = -4.02754 \times 10^{-10} \quad 1/(^{o}C)^{3}$$

TABLE 2.1

Bath type	T (^{o}C)	R (abs Ω)
boiling point of N_2	-195.8	4.40773
ice point	0.0	17.6274
boiling point of H_2O	100.0	24.0268
paraffin	185.0	29.5219

The absolute resistance of the platinum resistance unit versus temperature is shown in FIGURE 2.2 according to Equation 2.3 and Equation 2.4 with the above values of A,B,C and R_o = 17.6274 Ω. APPENDIX A includes a table of R(T) versus T with 2 ^{o}C increments.

FIGURE 2.3 is a comparison of the platinum unit and a standard platinum resistance thermometer (SPRT). To be suitable as an SPRT the resistor must be made of platinum of sufficient purity that the finished thermometer will have a value of R(100)/R(0) not less than 1.3925. (2) In our case this value is 1.3630, which is probably due to the impurities in the platinum wire and non-strain-free mounting.

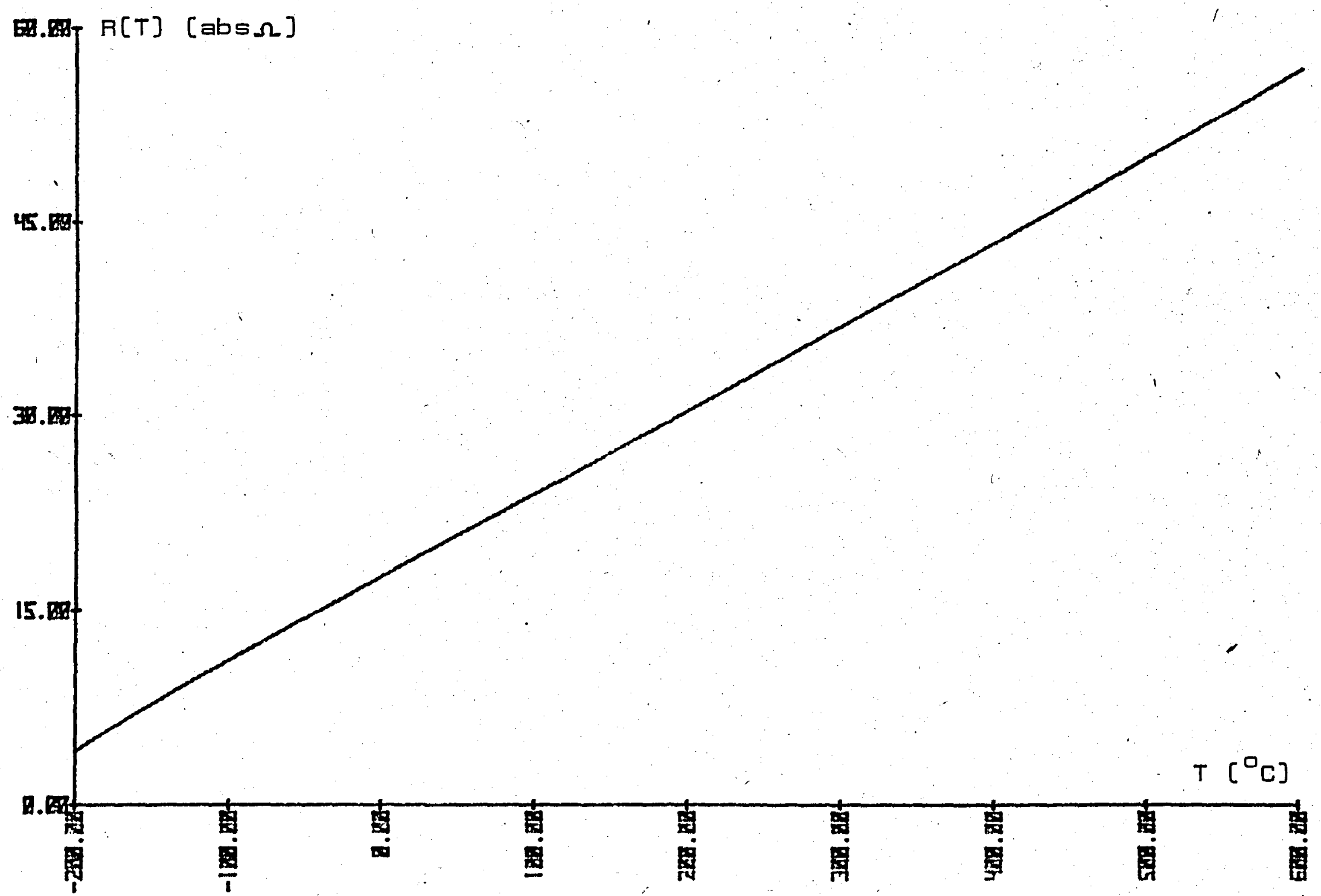
R(T) (abs Ω)
60.00
45.00
30.00
15.00
0.00
T (°C)
-200.00
-100.00
0.00
100.00
200.00
300.00
400.00
500.00
600.00

FIGURE 2.2

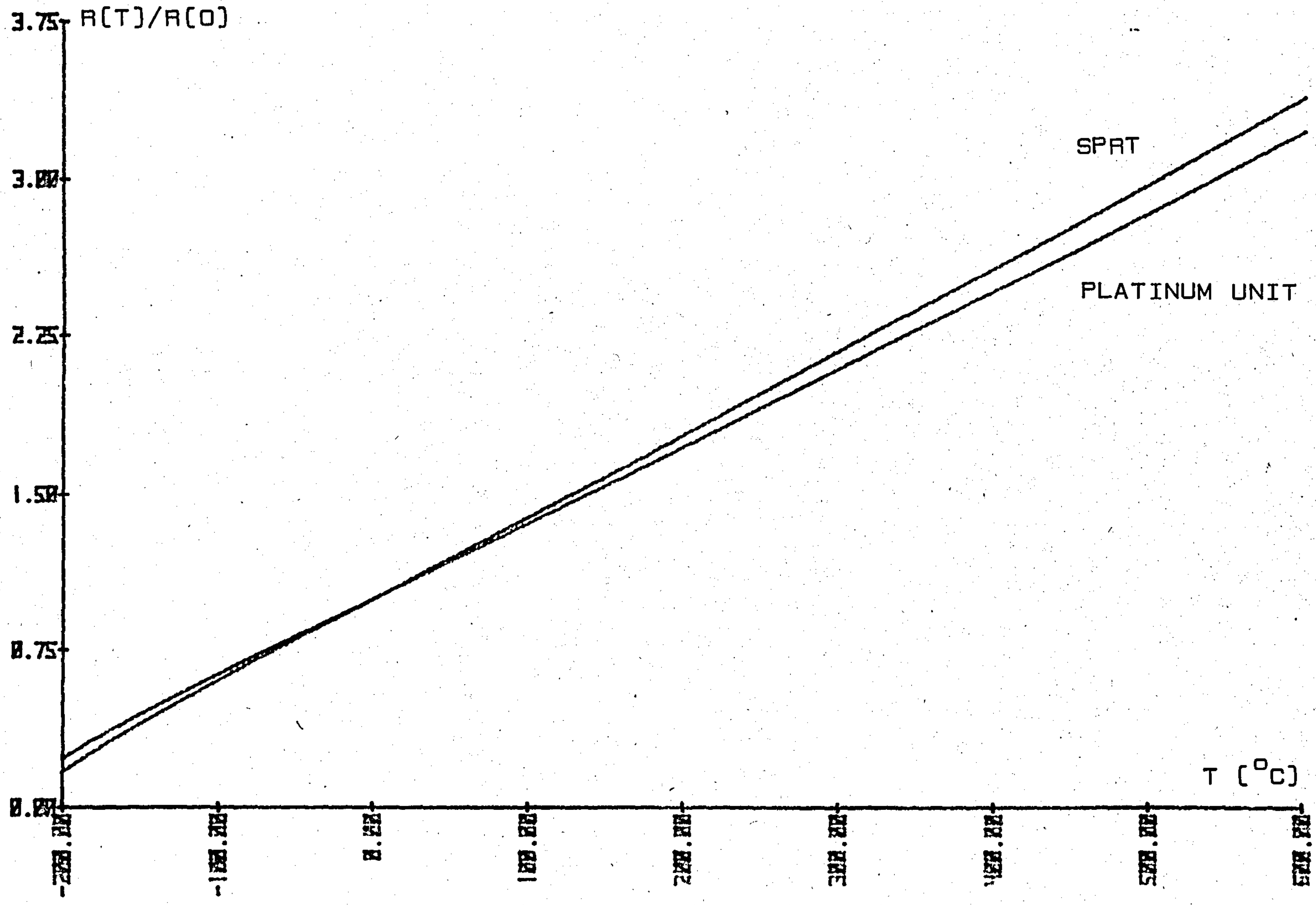
R(T)/R(O)
3.75
3.00
2.25
1.50
0.75
0.00
SPRT
PLATINUM UNIT
T (°C)
-200.00
-100.00
0.00
100.00
200.00
300.00
400.00
500.00
600.00

FIGURE 2.3

2.3. THERMOCOUPLE TEMPERATURE SENSOR

FIGURE 2.4 shows a thermoelectric circuit in which an emf (V_{tc}) is produced by subjecting the junctions of dissimilar metallic combinations (material A, material B) to different temperatures (T_1 , T_2).

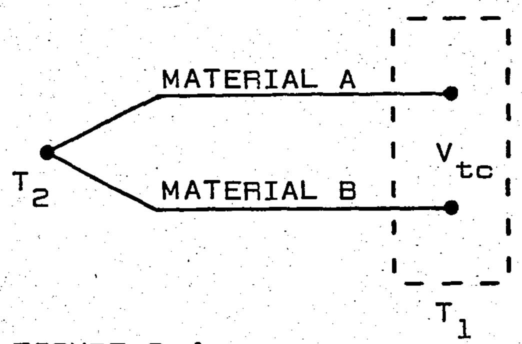

FIGURE 2.4

V_{tc} can be expressed as

$$V_{tc} = \int_{T_1}^{T_2} \alpha_{A,B} \; dT$$

where $T_2 > T_1$

and $\alpha_{A,B}$ is the Seebeck coefficient for the combination of materials A and B at a temperature T.

For standard thermocouples, thermoelectric voltage versus temperature tables or the coefficients of power series expansion for the thermoelectric voltage can readily be found in most handbooks. [APPENDIX B comprises the table for Type K thermocouples.]

If temperature differences of 10% are tolerable, one can accomplish this by using general calibration tables. If one needs 0.01 $^{\circ}C$ precision, or better, it will be necessary to do extremely careful in-place calibration against a calibrated thermometer such as a platinum or germanium resistance thermometer.[5]

In the construction of the chamber a Type K [Chromel-Alumel, Ni-10Cr vs Ni-3Mn-2Al-1Si] thermocouple is employed to measure temperature at the preparative stage. FIGURE 2.5 shows the configuration of the thermocouple up to the amplifier stage of the electronic circuitry.

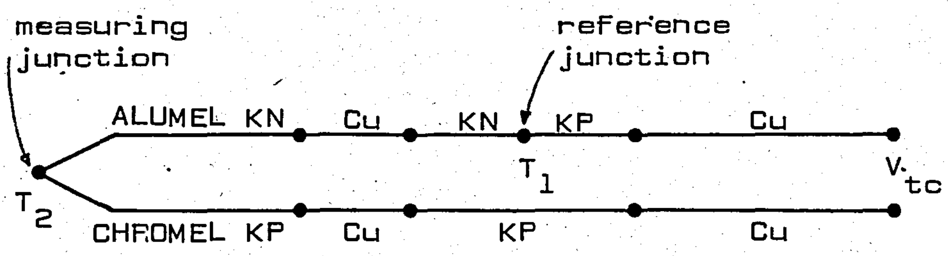

FIGURE 2.5

CHAPTER 3

TEMPERATURE MEASUREMENT AND CONTROL

3.1. TEMPERATURE CONTROL BY POWER DISSIPATION CONTROL

Power dissipation control is employed when the value of thermal resistance between the controlled mass and its heat sink is constant. The amount of power dissipated at the controlled mass and its heat sink is regulated by the set-point to the measured temperature difference.

Elements of a power dissipation type temperature control loop are shown in FIGURE 3.1. Any difference between the set-point signal and the temperature detector signal is introduced into the control system as an error signal. The output of the control system is effective in regulating the final control element in a manner that corrects for disturbances which may be introduced to the process. The measurement of the controlled variable, as detected by the temperature sensor, is fed back for comparison with the set-point, thus completing the feedback loop. [6],[7]

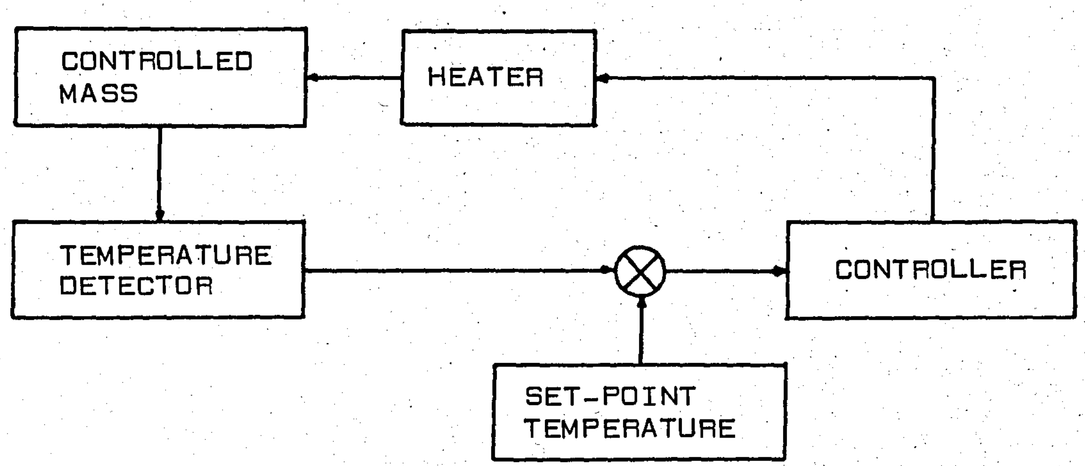

FIGURE 3.1

TEMPERATURE CONTROL BY POWER DISSIPATION CONTROL.

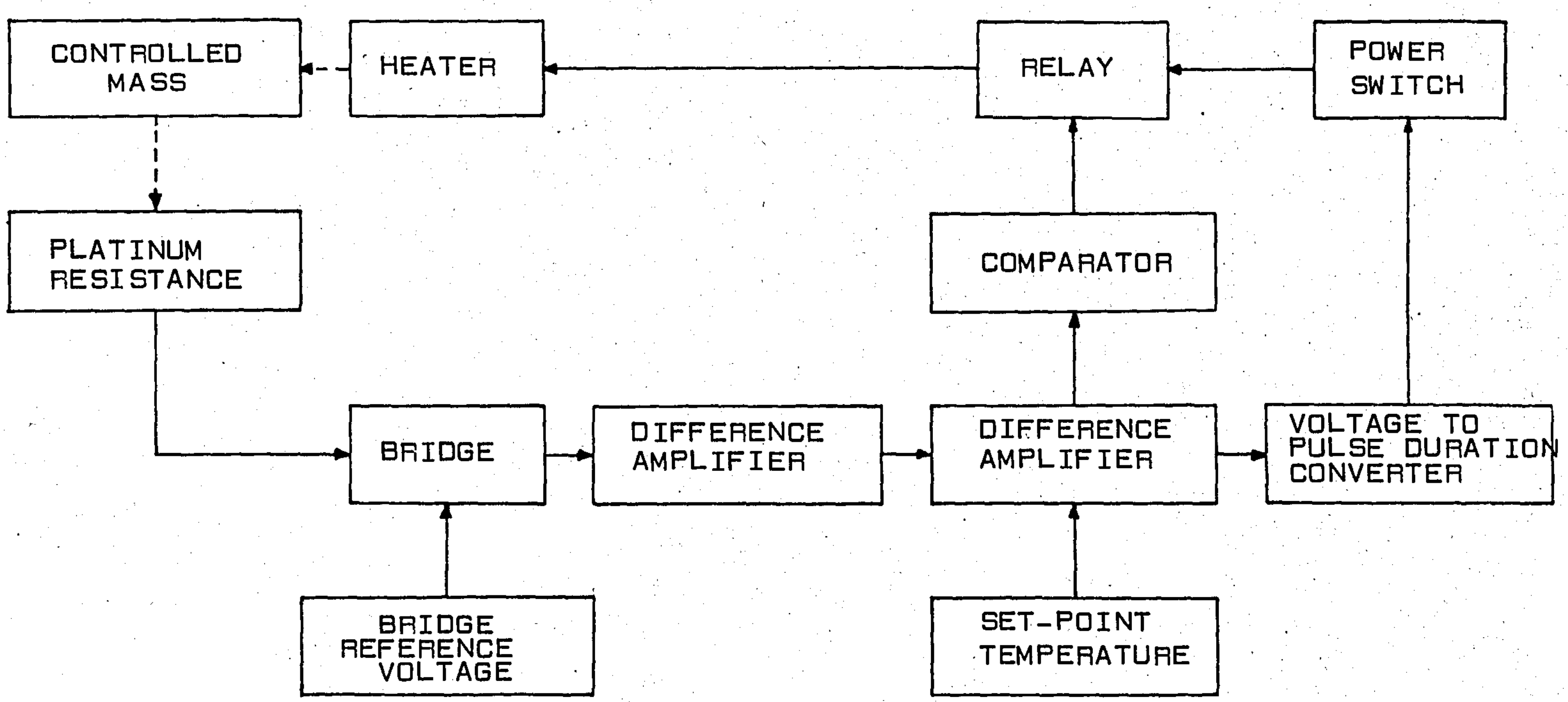

FIGURE 3.2

BLOCK DIAGRAM OF THE PLATINUM RESISTANCE TEMPERATURE MEASUREMENT AND CONTROL UNIT.

3.2. PLATINUM RESISTANCE TEMPERATURE MEASUREMENT AND CONTROL UNIT

3.2.1. Platinum Resistance Temperature Measurement

The circuit used to measure a temperature error (resistance change in the platinum wire) is the Wheatstone bridge. When the resistance element is connected to the rest of the circuit of the bridge with lead wires whose resistances are significant compared to the resistance change of the element (FIGURE 3.3), the output V_{rtd} is related to the input V_b by the equation

$$V_{rtd} = \frac{\Delta R + 2R_L}{4R + 2\Delta R + 4R_L} \cdot V_b \qquad 3.1$$

where R_L is the resistance of one of the lead wires.(8)
(See APPENDIX C for the values of R and R_L.)

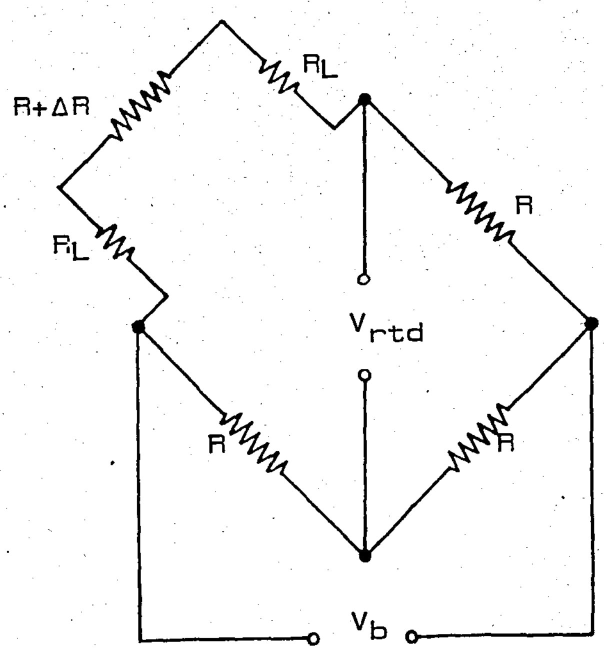

FIGURE 3.3

WHEATSTONE BRIDGE WITH PLATINUM RESISTANCE CONNECTED TO BRIDGE WITH SIGNIFICANT RESISTANCE IN LEAD WIRES.

The input to the bridge circuit V_b is accomplished by the circuit shown in FIGURE 3.4. The voltage divider network comprising R_2,R_3,R_4 and the Zener diode D_1 provide the reference voltage for the op-amp voltage regulator.[9] R_4 is a 20 turn trimmer potentiometer mounted on the panel to provide the exact adjustment of V_b. Each turn of the potentiometer corresponds to 1 mV of adjustment.

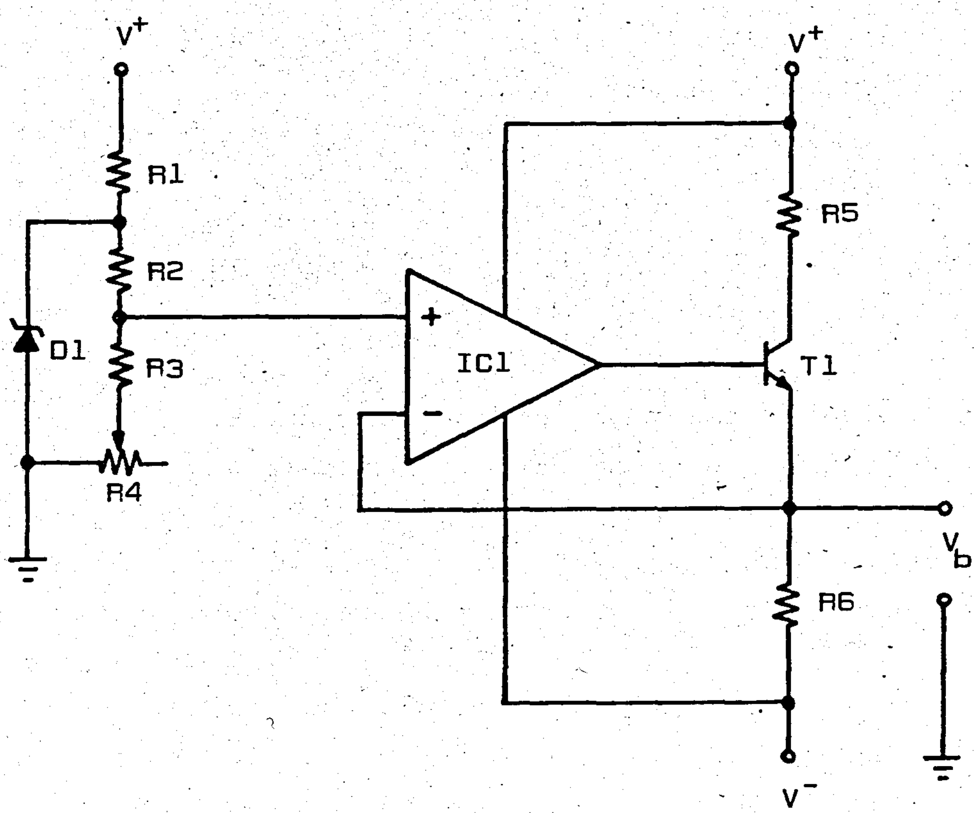

FIGURE 3.4

OP-AMP VOLTAGE REGULATOR FOR BRIDGE REFERENCE.

Types and values of components are given in APPENDIX F.

3.2.2. Amplification, Error Generation and Control

V_{rtd}, the output of the bridge circuit, is fed to a precision instrumentation amplifier (FIGURE 3.5). [The amplifier has practically constant closed loop gain of 400 utilizing internal resistors.]

The output V_p^* of the instrumentation amplifier is compared with the set-point temperature voltage V_{pr} and amplified to drive the 'voltage to pulse duration converter' stage. The output V_{pe} of this difference amplifier stage can be written as: (10)

$$V_{pe} = -\frac{R4}{R3} V_p - \frac{R6}{R5 + R6} \frac{R3 + R4}{R3} V_{pr}$$

or, with $R_3 = R_5$ and $R_4 = R_6$

$$V_{pe} = \frac{R4}{R3} (V_{pr} - V_p)$$

As well an input to the 'voltage to pulse duration converter', V_{pe} is also an input to an op-amp employed as a comparator. At this stage, V_{pe} i.e., the amplified difference between the set-point temperature voltage and the voltage corresponding to the actual temperature is compared with 0 V.

The output of the comparator is fed to the base of the transistor T3 via R8 turning on or off the transistor and consequently the relay RY1. [See FIGURE 3.8.]

* V_p and temperature relations are given in APPENDIX F.

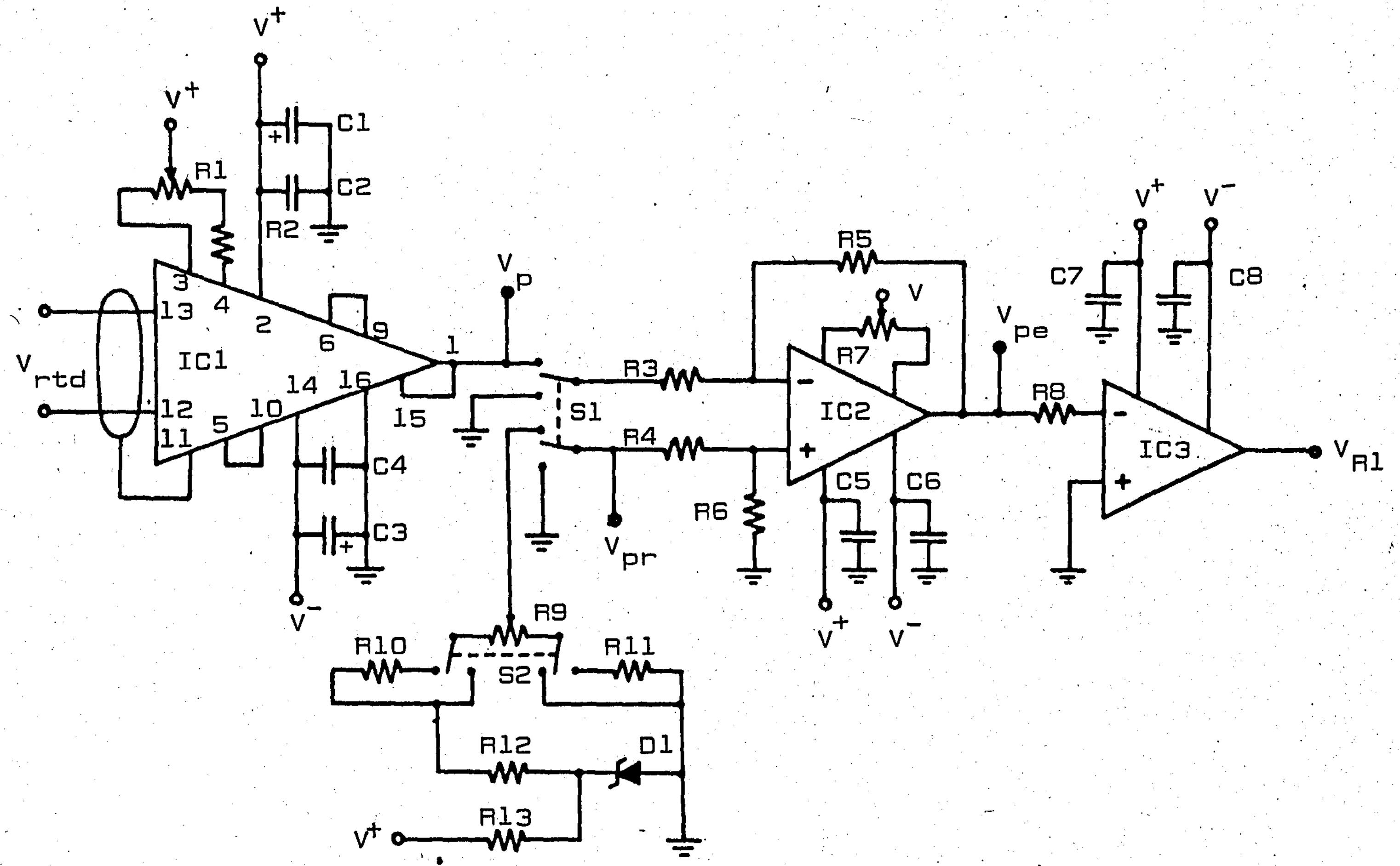

FIGURE 3.5

COMPLETE CIRCUIT DIAGRAM OF THE PLATINUM RESISTANCE TEMPERATURE MEASUREMENT, ERROR GENERATION AND COMPARATOR STAGES.

The 'voltage to pulse duration converter' (FIGURE 3.6) consists of 2 timers, one operating in the oscillatory mode. The period of oscillations of the first timer output is determined by a timing capacitor C1 and resistors R1 and R2 as.

$$T = t_1 + t_2$$

where t_1(output high) = 0.67 R1 C1

and t_2(output low) = 0.67 R2 C1

Admitting this as an input, the second timer generates an output having the same period T but an increase in the duty cycle in accordance with the control voltage V_{pe} (FIGURE 3.7). Thus the photo diode in the opto-coupler is driven proportional to the error voltage V_{pe}.

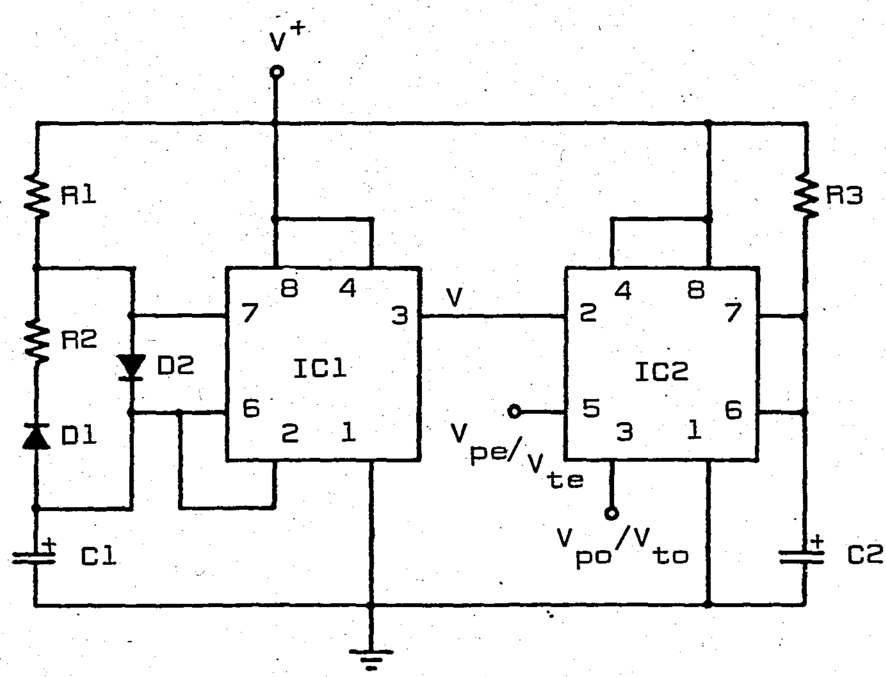

FIGURE 3.6

COMPLETE CIRCUIT DIAGRAM OF THE VOLTAGE TO PULSE DURATION CONVERTOR.

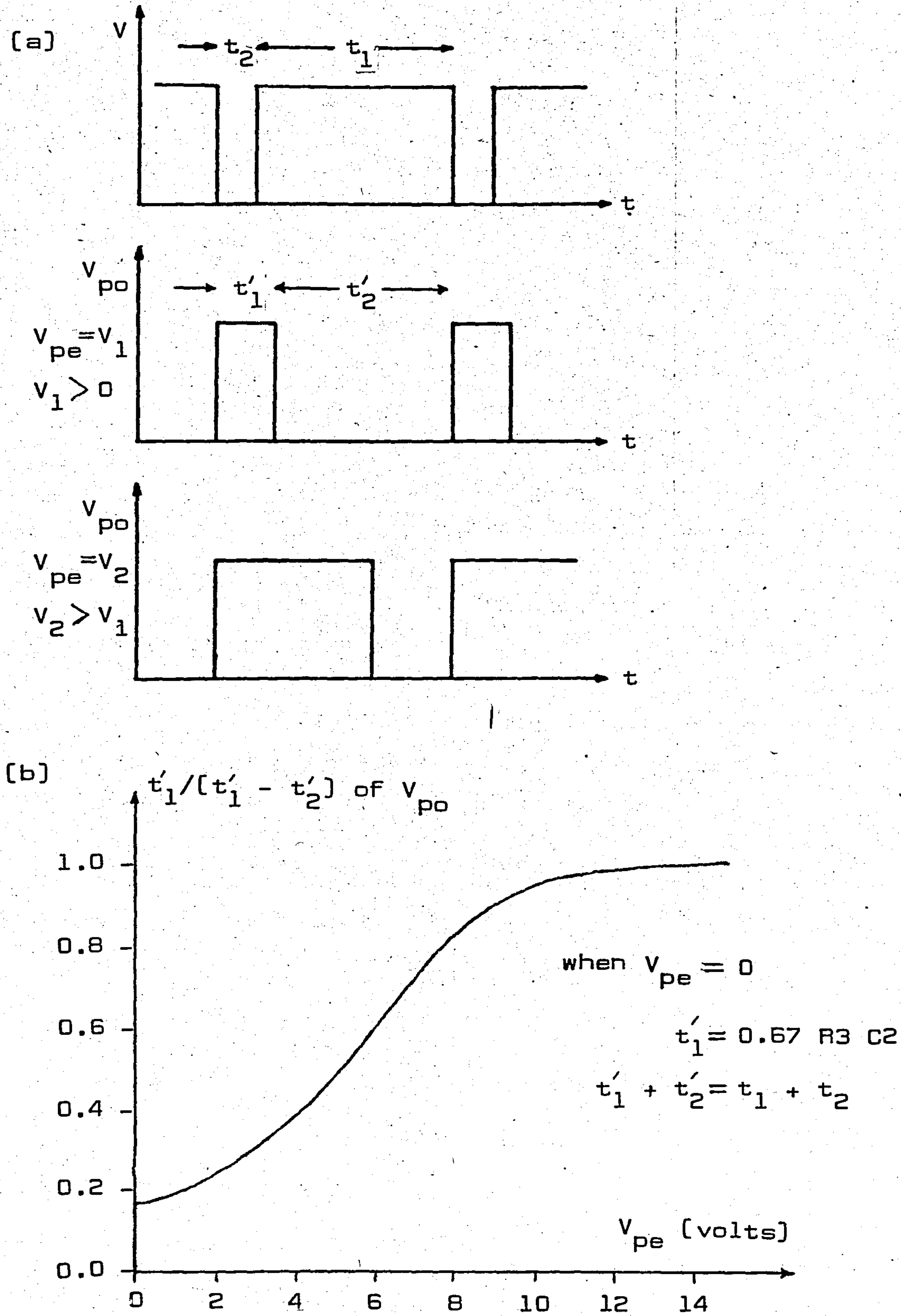

FIGURE 3.7

(a) OUTPUT WAVEFORMS OF THE VOLTAGE TO PULSE DURATION CONVERTER.

(b) THE GRAPH OF $t'_1/(t'_1 - t'_2)$ OF V_{po} vs V_{pe}.

3.2.3. Power Switching

The photo-transistor conducts when sufficient current passes through the LED in the opto-coupler [see FIGURE 3.8]. This, in turn, causes the Darlington pair (T1,T2) to turn off so that very little current flows through the bridge circuit. In effect, the bridge circuit no longer forms a 'short' between points A and B, so that the voltage between these points rises above the 'Zener' voltage determined by D5 and D6. Depending on the phase of the mains voltage, one of these diodes is forward biased and the other is reverse biased. Independent of the phase, the voltage across the two diodes is just over 6 V. Thus the triac receives gate current and switches the load on. If the LED is not driven, the photo-transistor turns off. As the voltage between points A and B rises after a zero crossing of the mains, T1,T2 turn on. This limits the voltage to a level not enough to cause the Zener diodes to conduct, so no gate current flows to the triac, switching the load off. (The RC network, connected across the triac, prevents the triac turning on at the wrong moment or even being damaged). [11]

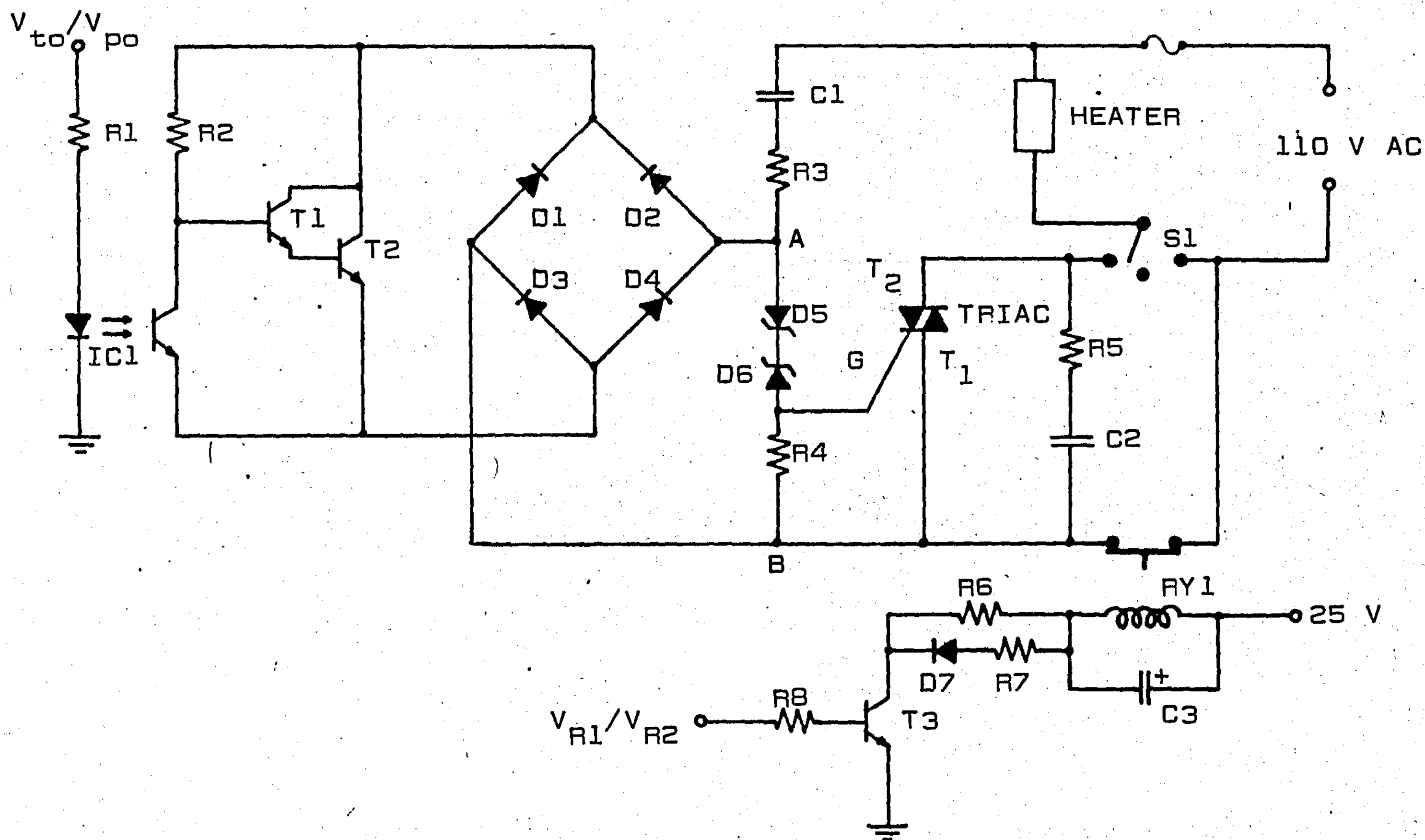

FIGURE 3.8

COMPLETE CIRCUIT DIAGRAM OF THE TRIAC POWER SWITCH.

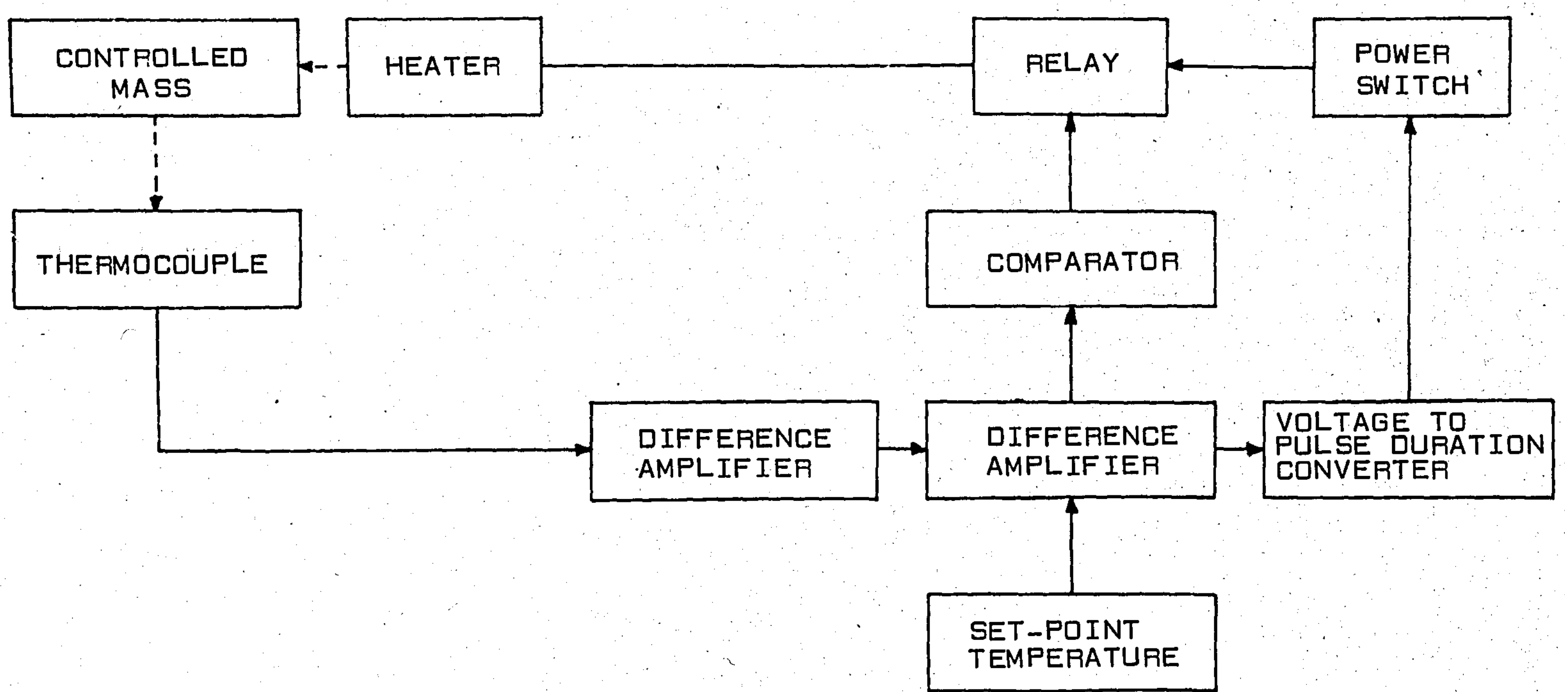

FIGURE 3.9

BLOCK DIAGRAM OF THE THERMOCOUPLE TEMPERATURE MEASUREMENT AND CONTROL UNIT.

3.3. THERMOCOUPLE TEMPERATURE MEASUREMENT AND CONTROL UNIT

At the first stage of the chamber, temperature errors of few degrees centigrade are tolerable since it is a preparative stage. Accordingly a Chromel-Alumel [Type K] thermocouple is utilized for temperature indication. The signal $[V_{tc}]$ generated by the thermocouple is amplified by a simple difference amplifier IC1 in FIGURE 3.10, whose output V_t is given as:

$$V_t = \frac{R3}{R1} V_{tc}$$

when $R1 = R2$

and $R3 = R4$.

Similarly

$$V_{te} = \frac{R7}{R5} [V_{tr} - V_t]$$

as $R5 = R7$

and $R6 = R8$

The comparator and the control stages function exactly in the same manner of the platinum temperature measurement and control unit.

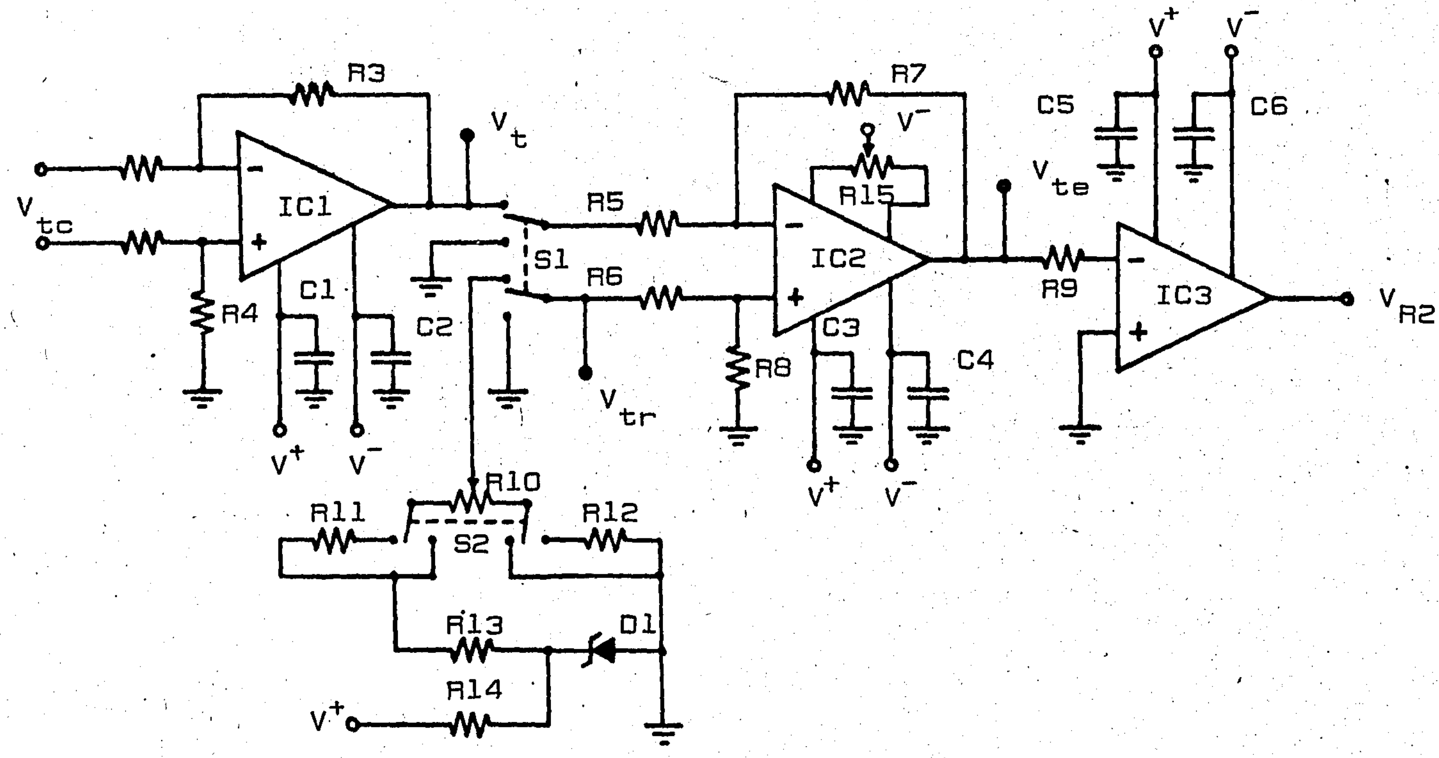

FIGURE 3.10

COMPLETE CIRCUIT DIAGRAM OF THE THERMOCOUPLE TEMPERATURE MEASUREMENT, ERROR GENERATION AND COMPARATOR STAGES.

CHAPTER 4

USER'S MANUAL

ADJUSTMENTS

a) Short the inputs of the thermocouple unit.
(Terminals C and D.)

b) Insert the V_{oos} ADJUST p.c.b.

c) Release switches S1 and S2.

d) Set MAINS switch 'ON'.
Wait for a few minutes.

e) ADJUST so that V_p, V_{pe}, V_t, V_{te} are less than 0.5 mV.

f) ADJUST V_b to 250 mV.

OPERATION

a) Insert the required RANGE p.c.b.

b) Set V_{tr} and V_{pr} as required,
from the tables in APPENDIX E and APPENDIX F.

c) Set switches H1 and H2 to 'AUTO'.

d) DEPRESS switches S1 and S2.

e) RED indicator lights will turn on when the desired temperature is reached. (Independently for each stage.)

e) The heaters may be operated MANUALLY, but close attention is required not to exceed the desired limit.

C H A P T E R 5

C O N C L U S I O N S

Design and construction of an environmental chamber comprising a sample holder whose temperature is regulated by a fully electronic temperature measurement and control unit which utilizes a platinum resistance as the final temperature detecting element, is discussed in this study.

Platinum, because of its superior physical and chemical characteristics, is used exclusively in precision thermometry. In this application the platinum wire is mounted so that thermal lag is minimized with the possibilities in hand.

Power dissipation control is employed, as the value of the thermal resistance between the controlled mass and its heat sink is constant. The power dissipated at the controlled mass and its heat sink is proportional to the difference between the set-point temperature and the measured temperature. At this point, integral action may be introduced to reduce temperature excursions.

Temperature control is accomplished in two stages. The first stage being a preparatory stage that regulates the heat sink temperature of the final stage. The necessity of the preparatory stage is obvious when the span of the temperature to be controlled is in the range -190 ^{o}C to 600 ^{o}C.

Temperature measurement accuracy may be improved by calibrating the platinum wire in accordance with the IPTS-68 requirements, and by using platinum of higher purity, and by providing a strain free mounting. In the latter case one should consider the increase in thermal lag which may easily exceed 10 seconds.

Precision may be improved by eliminating 'human factors'. This may be accomplished in several ways, two of which are:

1- The addition of a function generator that will provide direct setting and direct reading of temperature, thus eliminating the necessity of 'look-up' tables.

2- A microprocessor that will take over temperature control as well as the above function.

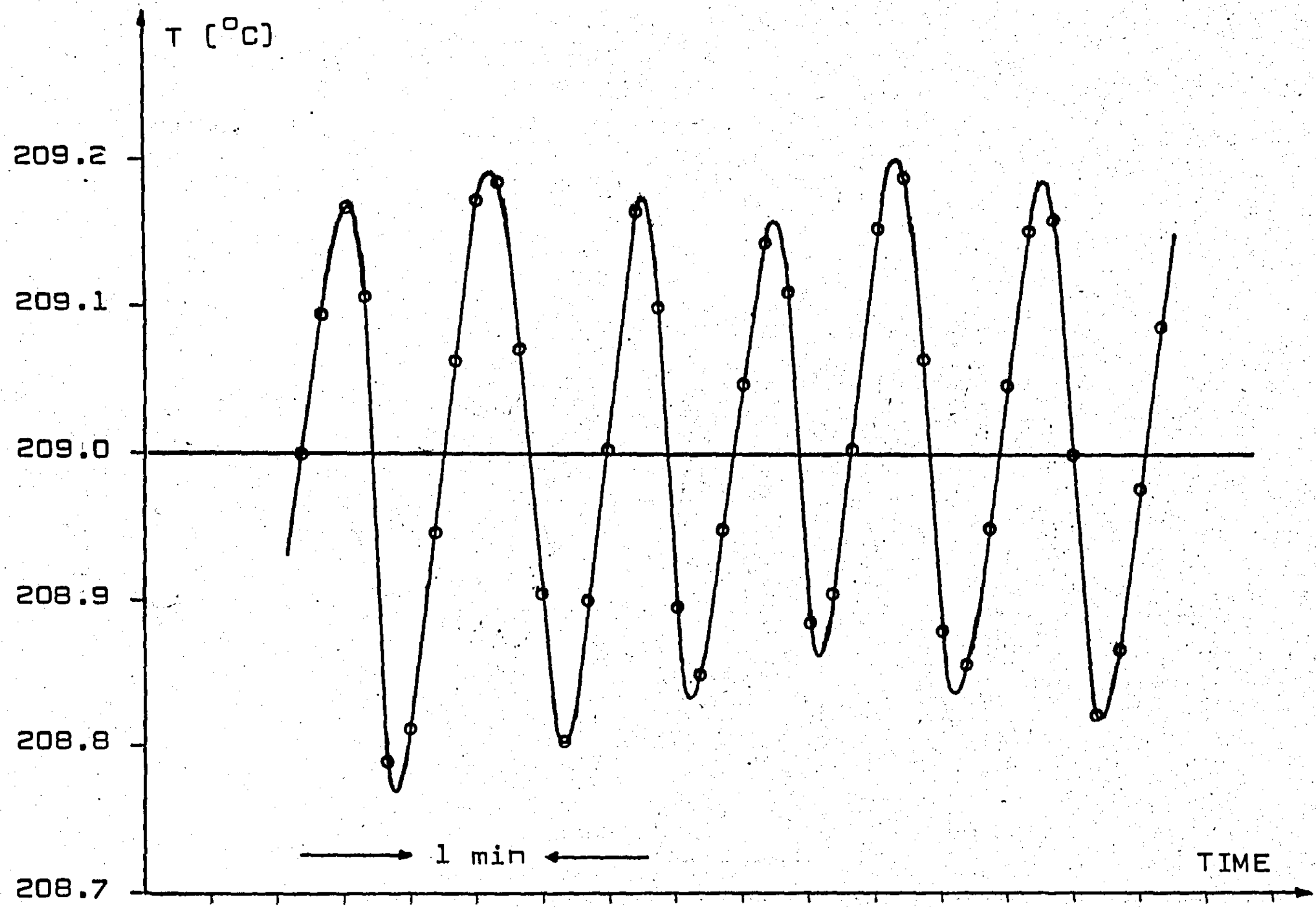

FIGURE 5.1

PERFOPMANCE OF THE PLATINUM UNIT SET AT 209.0 °C.

(TEMPERATURE OF THE PREPARATORY STAGE IS AROUND 140 °C).

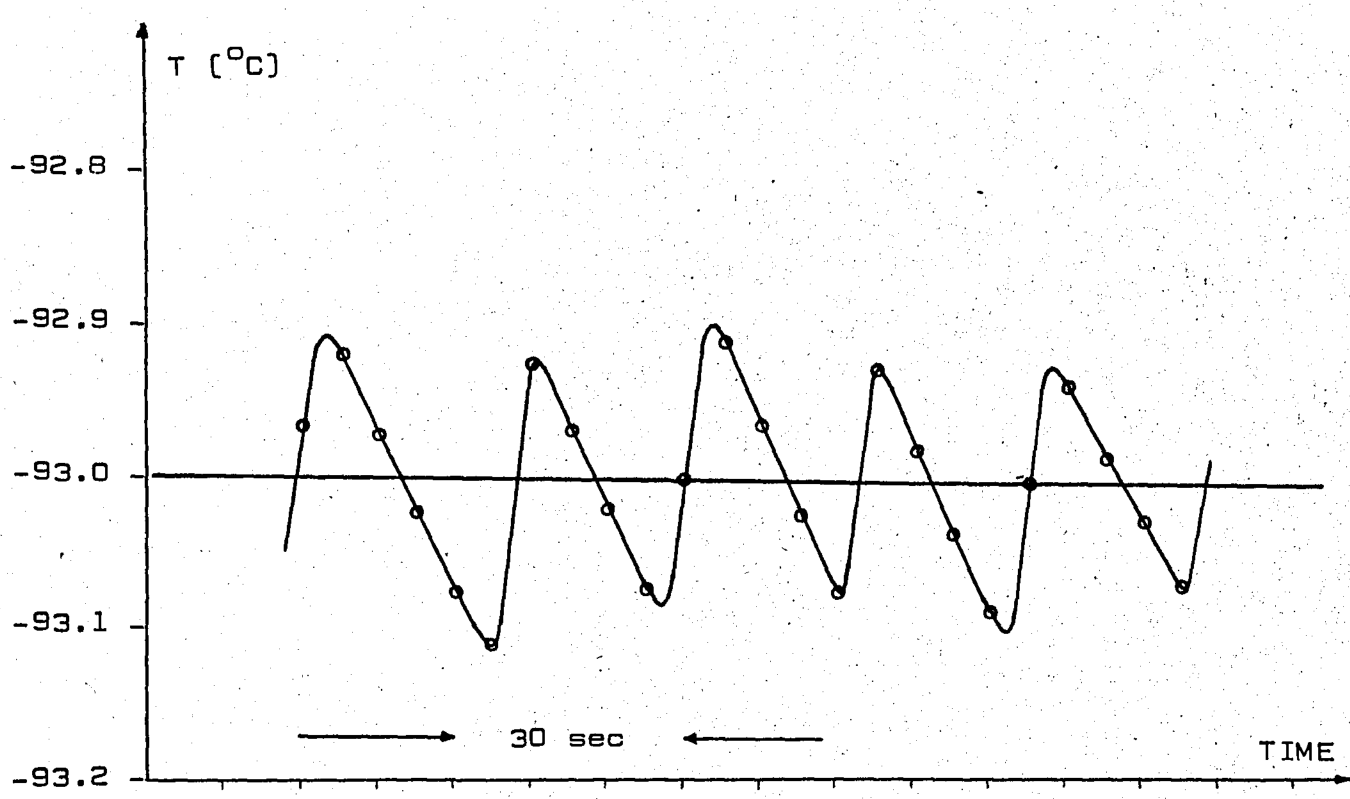

FIGURE 5.2

PERFORMANCE OF THE PLATINUM UNIT SET AT -93.0 °C.

(TEMPERATURE OF THE PREPARATORY STAGE IS AROUND -100 °C).

A P P E N D I X   A

VALUES OF R(T) OF THE PLATINUM UNIT ACCORDING TO EQUATION 2.3 AND EQUATION 2.4 WITH

$$A = 6.36407 \times 10^{-2} \quad 1/^{o}C$$

$$B = 3.53323 \times 10^{-6} \quad 1/(^{o}C)^{2}$$

$$C = -4.02754 \times 10^{-10} \quad 1/(^{o}C)^{3}$$

AND

$$R_{o} = 17.6274\,\Omega$$

APPENDIX A
VALUES OF R(T) OF THE PLATINUM UNIT,
ACCORDING TO EQUATION 2.3 AND EQUATION 2.4.
(T IS IN °C, R(T) IN ABS Ω.)

T	R(T)	T	R(T)	T	R(T)	T	R(T)
-200	4.0740	-150	7.8210	-100	11.2181	-50	14.4466
-198	4.2334	-148	7.9622	-98	11.3495	-48	14.5742
-196	4.3919	-146	8.1028	-96	11.4806	-46	14.7017
-194	4.5495	-144	8.2430	-94	11.6115	-44	14.8291
-192	4.7062	-142	8.3826	-92	11.7421	-42	14.9565
-190	4.8621	-140	8.5217	-90	11.8725	-40	15.0838
-188	5.0171	-138	8.6604	-88	12.0028	-38	15.2111
-186	5.1712	-136	8.7985	-86	12.1328	-36	15.3384
-184	5.3246	-134	8.9362	-84	12.2626	-34	15.4656
-182	5.4771	-132	9.0735	-82	12.3922	-32	15.5928
-180	5.6289	-130	9.2103	-80	12.5216	-30	15.7199
-178	5.7798	-128	9.3467	-78	12.6509	-28	15.8471
-176	5.9301	-126	9.4827	-76	12.7800	-26	15.9742
-174	6.0795	-124	9.6183	-74	12.9089	-24	16.1014
-172	6.2283	-122	9.7535	-72	13.0377	-22	16.2285
-170	6.3763	-120	9.8883	-70	13.1664	-20	16.3556
-168	6.5237	-118	10.0227	-68	13.2949	-18	16.4827
-166	6.6703	-116	10.1568	-66	13.4233	-16	16.6099
-164	6.8164	-114	10.2906	-64	13.5516	-14	16.7370
-162	6.9617	-112	10.4240	-62	13.6797	-12	16.8641
-160	7.1064	-110	10.5571	-60	13.8078	-10	16.9913
-158	7.2505	-108	10.6899	-58	13.9357	-8	17.1185
-156	7.3940	-106	10.8224	-56	14.0636	-6	17.2457
-154	7.5369	-104	10.9546	-54	14.1913	-4	17.3729
-152	7.6792	-102	11.0865	-52	14.3190	-2	17.5001
-150	7.8210	-100	11.2181	-50	14.4466	0	17.6274

APPENDIX A (CONTINUED)
VALUES OF R(T) OF THE PLATINUM UNIT,
ACCORDING TO EQUATION 2.3 AND EQUATION 2.4.
(T IS IN °C, R(T) IN ABS Ω.)

T	R(T)	T	R(T)	T	R(T)	T	R(T)
0	17.6274	50	20.8183	100	24.0268	150	27.2530
2	17.7547	52	20.9463	102	24.1555	152	27.3824
4	17.8820	54	21.0743	104	24.2842	154	27.5119
6	18.0094	56	21.2024	106	24.4130	156	27.6413
8	18.1368	58	21.3304	108	24.5418	158	27.7708
10	18.2642	60	21.4586	110	24.6706	160	27.9004
12	18.3916	62	21.5867	112	24.7995	162	28.0299
14	18.5191	64	21.7149	114	24.9284	164	28.1595
16	18.6466	66	21.8431	116	25.0573	166	28.2891
18	18.7741	68	21.9713	118	25.1862	168	28.4188
20	18.9016	70	22.0996	120	25.3152	170	28.5484
22	19.0292	72	22.2278	122	25.4442	172	28.6781
24	19.1568	74	22.3562	124	25.5732	174	28.8079
26	19.2844	76	22.4845	126	25.7022	176	28.9376
28	19.4121	78	22.6129	128	25.8313	178	29.0674
30	19.5398	80	22.7413	130	25.9604	180	29.1972
32	19.6675	82	22.8697	132	26.0895	182	29.3270
34	19.7953	84	22.9981	134	26.2187	184	29.4569
36	19.9230	86	23.1266	136	26.3479	186	29.5868
38	20.0508	88	23.2551	138	26.4771	188	29.7167
40	20.1787	90	23.3837	140	26.6063	190	29.8467
42	20.3065	92	23.5122	142	26.7356	192	29.9767
44	20.4344	94	23.6408	144	26.8649	194	30.1067
46	20.5623	96	23.7695	146	26.9943	196	30.2367
48	20.6903	98	23.8981	148	27.1236	198	30.3668
50	20.8183	100	24.0268	150	27.2530	200	30.4969

APPENDIX A (CONTINUED)
VALUES OF R(T) OF THE PLATINUM UNIT,
ACCORDING TO EQUATION 2.3 AND EQUATION 2.4.
(T IS IN °C, R(T) IN ABS Ω.)

T	R(T)	T	R(T)	T	R(T)	T	R(T)
200	30.4969	250	33.7584	300	37.0376	350	40.3345
202	30.6270	252	33.8892	302	37.1691	352	40.4667
204	30.7571	254	34.0201	304	37.3007	354	40.5990
206	30.8873	256	34.1510	306	37.4323	356	40.7313
208	31.0175	258	34.2819	308	37.5639	358	40.8636
210	31.1478	260	34.4128	310	37.6956	360	40.9960
212	31.2780	262	34.5438	312	37.8272	362	41.1283
214	31.4083	264	34.6748	314	37.9589	364	41.2608
216	31.5386	266	34.8058	316	38.0907	366	41.3932
218	31.6690	268	34.9369	318	38.2224	368	41.5257
220	31.7994	270	35.0680	320	38.3542	370	41.6582
222	31.9298	272	35.1991	322	38.4860	372	41.7907
224	32.0602	274	35.3302	324	38.6179	374	41.9232
226	32.1907	276	35.4614	326	38.7498	376	42.0558
228	32.3212	278	35.5926	328	38.8817	378	42.1884
230	32.4517	280	35.7238	330	39.0136	380	42.3211
232	32.5822	282	35.8551	332	39.1456	382	42.4537
234	32.7128	284	35.9863	334	39.2775	384	42.5864
236	32.8434	286	36.1176	336	39.4096	386	42.7191
238	32.9740	288	36.2490	338	39.5416	388	42.8519
240	33.1047	290	36.3803	340	39.6737	390	42.9847
242	33.2354	292	36.5117	342	39.8058	392	43.1175
244	33.3661	294	36.6432	344	39.9379	394	43.2503
246	33.4968	296	36.7746	346	40.0701	396	43.3832
248	33.6276	298	36.9061	348	40.2023	398	43.5161
250	33.7584	300	37.0376	350	40.3345	400	43.6490

APPENDIX A (CONTINUED)
VALUES OF R(T) OF THE PLATINUM UNIT,
ACCORDING TO EQUATION 2.3 AND EQUATION 2.4.
(T IS IN °C, R(T) IN ABS Ω.)

T	R(T)	T	R(T)	T	R(T)	T	R(T)
400	43.6490	450	46.9812	500	50.3311	550	53.6986
402	43.7819	452	47.1148	502	50.4654	552	53.8337
404	43.9149	454	47.2485	504	50.5998	554	53.9688
406	44.0479	456	47.3822	506	50.7342	556	54.1039
408	44.1810	458	47.5160	508	50.8687	558	54.2390
410	44.3140	460	47.6498	510	51.0032	560	54.3742
412	44.4471	462	47.7836	512	51.1377	562	54.5094
414	44.5802	464	47.9174	514	51.2722	564	54.6447
416	44.7134	466	48.0512	516	51.4067	566	54.7799
418	44.8466	468	48.1851	518	51.5413	568	54.9152
420	44.9798	470	48.3190	520	51.6759	570	55.0505
422	45.1130	472	48.4530	522	51.8106	572	55.1859
424	45.2462	474	48.5869	524	51.9453	574	55.3213
426	45.3795	476	48.7209	526	52.0800	576	55.4567
428	45.5129	478	48.8549	528	52.2147	578	55.5921
430	45.6462	480	48.9890	530	52.3495	580	55.7276
432	45.7796	482	49.1231	532	52.4842	582	55.8631
434	45.9130	484	49.2572	534	52.6191	584	55.9986
436	46.0464	486	49.3913	536	52.7539	586	56.1341
438	46.1799	488	49.5255	538	52.8888	588	56.2697
440	46.3133	490	49.6597	540	53.0237	590	56.4053
442	46.4469	492	49.7939	542	53.1586	592	56.5410
444	46.5804	494	49.9281	544	53.2936	594	56.6766
446	46.7140	496	50.0624	546	53.4285	596	56.8123
448	46.8476	498	50.1967	548	53.5635	598	56.9480
450	46.9812	500	50.3311	550	53.6986	600	57.0838

APPENDIX B

REFERENCE TABLE FOR TYPE K THERMOCOUPLES

ASTM Standard E 230-72 in the Annual Book of ASTM Standards specifies that the standard limits of error for Type K commercial thermocouples be ±2.2 °C between 0 and 277 °C and ± 3/4 per cent between 277 and 1260 °C. Limits of error are not specified for Type K thermocouples below 0 °C. Also upper temperature limit of 1260 °C decreases accordingly with wire diameter.

TYPE K

NICKEL-CHROMIUM ALLOY VS NICKEL-ALUMINUM-SILICON ALLOY THERMOCOUPLES

TEMPERATURES IN DEGREES C (IPTS 1968). REFERENCE JUNCTION AT 0 DEGREES C.

DEG C	0	10	20	30	40	50	60	70	80	90	100	DEG C
	THERMOELECTRIC VOLTAGE IN ABSOLUTE MILLIVOLTS											
-200	-5.891	-6.035	-6.158	-6.262	-6.344	-6.404	-6.441	-6.458				-200
-100	-3.553	-3.852	-4.138	-4.410	-4.669	-4.912	-5.141	-5.354	-5.550	-5.730	-5.891	-100
- 0	0.000	-0.392	-0.777	-1.156	-1.527	-1.889	-2.243	-2.586	-2.920	-3.242	-3.553	- 0
+ 0	0.000	0.397	0.798	1.203	1.611	2.022	2.436	2.850	3.266	3.681	4.095	+ 0
100	4.095	4.508	4.919	5.327	5.733	6.137	6.539	6.939	7.338	7.737	8.137	100
200	8.137	8.537	8.938	9.341	9.745	10.151	10.560	10.969	11.381	11.793	12.207	200
300	12.207	12.623	13.039	13.456	13.874	14.292	14.712	15.132	15.552	15.974	16.395	300
400	16.395	16.818	17.241	17.664	18.088	18.513	18.938	19.363	19.788	20.214	20.640	400
500	20.640	21.066	21.493	21.919	22.346	22.772	23.198	23.624	24.050	24.476	24.902	500
600	24.902	25.327	25.751	26.176	26.599	27.022	27.445	27.867	28.288	28.709	29.128	600
700	29.128	29.547	29.965	30.383	30.799	31.214	31.629	32.042	32.455	32.866	33.277	700
800	33.277	33.686	34.095	34.502	34.909	35.314	35.718	36.121	36.524	36.925	37.325	800
900	37.325	37.724	38.122	38.519	38.915	39.310	39.703	40.096	40.488	40.879	41.269	900
1,000	41.269	41.657	42.045	42.432	42.817	43.202	43.585	43.968	44.349	44.729	45.108	1,000
1,100	45.108	45.486	45.863	46.238	46.612	46.985	47.356	47.726	48.095	48.462	48.828	1,100
1,200	48.828	49.192	49.555	49.916	50.276	50.633	50.990	51.344	51.697	52.049	52.398	1,200
1,300	52.398	52.747	53.093	53.439	53.782	54.125	54.466	54.807				1,300
DEG C	0	10	20	30	40	50	60	70	80	90	100	DEG C

APPENDIX C

THE TYPE AND VALUES OF COMPONENTS USED IN CONSTRUCTION

C.1. Values of R and R_L of the Platinum Unit

In FIGURE 3.3 the platinum wire and its leads constitute the resistance of one leg of the bridge circuit. Three identical resistors complete the bridge. These resistors are 20 turn trimmer potentiometers which are mounted on a printed circuit board, precision adjusted and sealed. The values of these resistors and the corresponding temperature ranges are given in TABLE C.1.

TABLE C.1

TEMPERATURE RANGE [°C]	R_L [Ω]	R [each resistor on the p.c.b.][Ω]
-180 to -140	0.027	5.6389
-140 to -80	0.027	8.5217
-80 to 0	0.027	12.5216
0 to 140	0.027	17.6274
140 to 340	0.027	26.6063
340 to 600	0.027	39.6737

C.2. Types and Values of Circuit Elements of FIGURE 3.4

IC1 : 1/2 LM 747

T1 : BC 141

D1 : 2.7 V ZENER

R1 : 4650 Ω, 1/4 W

R2 : 2400 Ω, 1/4 W

R3 : 240 Ω, 1/4 W

R4 : 20 Ω, 20 TURN TRIMMER POTENTIOMETER

R5 : 2 x 100 Ω, 1/4 W

R6 : 10 kΩ, 1/4 W

C.3. Types and Values of Circuit Elements of FIGURE 3.5

IC1 : LH 0038 PRECISION INSTRUMENTATION AMPLIFIER

IC2 , IC3 : 1/2 LM 747

D1 : 12 V ZENER

S1 , S2 : DPDT (B-M) SWITCH

R1 , R7 : 5 kΩ, 20 TURN TRIMMER POTENTIOMETER

R3 , R4 : 10 kΩ, 1/4 W

R5 , R6 : 720 kΩ, 1/4 W

R8 : 100 Ω, 1/4 W

R9 : 20 kΩ, 10 TURN POTENTIOMETER

R10 , R11 : 18 kΩ, 1/4 W

R12 : 5.6 kΩ, 1/4 W

R13 : 1 kΩ, 1/4 W

C1, C3 : 10 μF, ELECTROLYTIC

C2, C4 : 0.01 μF, CERAMIC DISK

C5, C6, C7, C8 : 0.1 μF CERAMIC DISK

C.4. Types and Values of Circuit Elements of FIGURE 3.6

IC1 , IC2 : 555 TIMER
D1 , D2 : 1N 4001

Thermocouple stage
R1 : 610 kΩ, 1/4 W
R2 : 10 kΩ, 1/4 W
R3 : 120 kΩ, 1/4 W
C1 : 10 μF , ELECTROLYTIC
C2 : 2 μF , ELECTROLYTIC

Platinum stage
R1 : 660 kΩ, 1/4 W
R2 : 4.7 kΩ, 1/4 W
R3 : 120 kΩ, 1/4 W
C1 : 10 μF , ELECTROLYTIC
C2 : 2 μF , ELECTROLYTIC

C.5. Types and Values of Circuit Elements of FIGURE 3.8

IC1 : CNY 24
TRIAC : Q 4008 L4A
T1 , T2 , T3 : BC 107
D1 , D2 , D3 , D4 : 1N 4001
D5 , D6 : 5.6 V ZENER
D7 : LED
RY1 : SPDT (B-M) RELAY
S1 : SPDT SWITCH
R1 : 10 kΩ, 1/4 W
R2 : 18 kΩ, 1/4 W
R3 : 1 kΩ, 1 W
R4 : 1 kΩ, 1/4 W

R5 : 47 Ω, 1 W
R6 : 330 Ω, 1 W
R7 : 2.2 kΩ, 1/2 W
R8 : 5.6 kΩ, 1/4 W
C1 : 0.5 μF ; 400 V
C2 : 0.1 μF , 400 V
C3 : 50 μF , ELECTROLYTIC

C.6. Types and Values of Circuit Elements of FIGURE 3.10

IC1 , IC2 , IC3 : 1/2 LM747
D1 : 12 V ZENER
S1 , S2 : DPDT (B-M) SWITCH
R1 , R2 : 100.0 Ω, 1/4 W
R3 , R4 : 3300 Ω, 1/4 W
R5 , R6 : 10 kΩ, 1/4 W
R7 , R8 : 1.2 MΩ, 1/4 W
R9 : 100 Ω, 1/4 W
R10 : 50 kΩ, 10 TURN POTENTIOMETER
R11 , R12 : 47 kΩ, 1/4 W
R13 : 18 kΩ, 1/4 W
R14 : 1 kΩ, 1/4 W
C1 , C2 , C3 , C4 , C5 , C6 : 0.1 μF , CERAMIC DISK

APPENDIX D

DC POWER SUPPLY

A positive voltage regulator (LM 340T15) is connected with a negative voltage regulator (LM 320T15) to form a non-tracking dual power supply as shown in the figure below.

Each regulator exibits line and load regulation consistent with their specifications as individual devices.

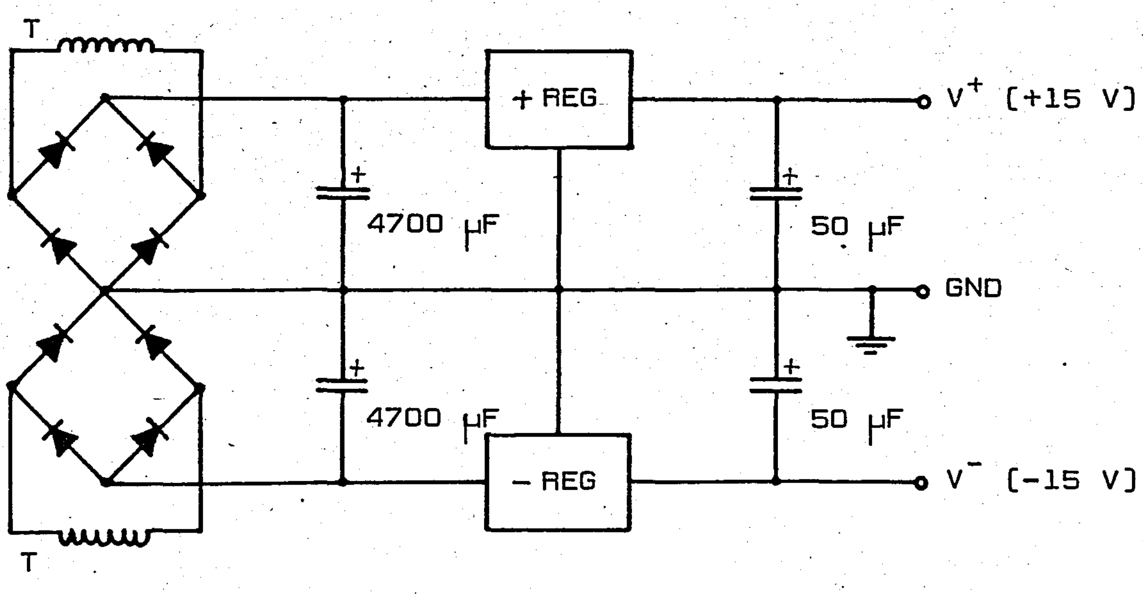

T is a 110-2x18 V transformer.

A P P E N D I X   E

SET-POINT VOLTAGES FOR THE THERMOCOUPLE UNIT

$$V_t = V'_t + V_{oos} - V'_t(\text{ambient})$$

[V_{oos} is the output offset voltage of the thermocouple difference amplifier]

T	V'_t	T	V'_t	T	V'_t
0	0.000	200	2.706	400	5.453
10	0.132	210	2.839	410	5.594
20	0.265	220	2.973	420	5.734
30	0.400	230	3.107	430	5.875
40	0.536	240	3.241	440	6.016
50	0.673	250	3.376	450	6.157
60	0.810	260	3.512	460	6.299
70	0.948	270	3.648	470	6.440
80	1.086	280	3.785	480	6.581
90	1.224	290	3.922	490	6.723
100	1.362	300	4.060	500	6.865
110	1.499	310	4.198	510	7.007
120	1.636	320	4.337	520	7.148
130	1.772	330	4.475	530	7.290
140	1.907	340	4.614	540	7.432
150	2.041	350	4.754	550	7.574
160	2.175	360	4.893	560	7.716
170	2.308	370	5.033	570	7.857
180	2.441	380	5.173	580	7.999
190	2.573	390	5.313	590	8.141
200	2.706	400	5.453	600	8.282

[T is in ^{o}C, V'_t in volts.]

A P P E N D I X   F

SET POINT VOLTAGES FOR THE PLATINUM UNIT

The following is the computer listing of V_p versus temperature. The computer program was devised to provide the user with the 'set-point voltages' for the platinum unit. It is possible to calculate these values by hand, using EQUATIONS 2.3, 2.4 and 3.1, but it is time consuming.

APPENDIX F

T	P(T)	V
-180	5.6289	0.239
-179	5.7045	0.569
-178	5.7798	0.894
-177	5.8550	1.214
-176	5.9301	1.529
-175	6.0049	1.840
-174	6.0795	2.145
-173	6.1540	2.446
-172	6.2283	2.743
-171	6.3024	3.035
-170	6.3763	3.323
-169	6.4501	3.607
-168	6.5237	3.886
-167	6.5971	4.162
-166	6.6703	4.434
-165	6.7434	4.702
-164	6.8164	4.966
-163	6.8891	5.227
-162	6.9617	5.484
-161	7.0341	5.737
-160	7.1064	5.988
-159	7.1785	6.234
-158	7.2505	6.478
-157	7.3223	6.718
-156	7.3940	6.956
-155	7.4655	7.190
-154	7.5369	7.421
-153	7.6081	7.649
-152	7.6792	7.874
-151	7.7502	8.097
-150	7.8210	8.317
-149	7.8916	8.534
-148	7.9622	8.748
-147	8.0326	8.960
-146	8.1028	9.169
-145	8.1730	9.375
-144	8.2430	9.580
-143	8.3128	9.781
-142	8.3826	9.981
-141	8.4522	10.178
-140	8.5217	10.373

APPENDIX F (CONTINUED)

T	R(T)	V
-140	8.5217	0.158
-139	8.5911	0.359
-138	8.6604	0.559
-137	8.7295	0.756
-136	8.7985	0.952
-135	8.8674	1.146
-134	8.9362	1.338
-133	9.0049	1.528
-132	9.0735	1.716
-131	9.1419	1.903
-130	9.2103	2.088
-129	9.2786	2.271
-128	9.3467	2.452
-127	9.4147	2.632
-126	9.4827	2.810
-125	9.5505	2.987
-124	9.6183	3.162
-123	9.6859	3.335
-122	9.7535	3.507
-121	9.8209	3.678
-120	9.8883	3.847
-119	9.9556	4.014
-118	10.0227	4.181
-117	10.0898	4.345
-116	10.1568	4.509
-115	10.2238	4.670
-114	10.2906	4.831
-113	10.3573	4.990
-112	10.4240	5.148
-111	10.4906	5.305
-110	10.5571	5.460
-109	10.6235	5.614
-108	10.6899	5.767
-107	10.7562	5.919
-106	10.8224	6.069
-105	10.8885	6.219
-104	10.9546	6.367
-103	11.0206	6.514
-102	11.0865	6.659
-101	11.1523	6.804
-100	11.2181	6.948

APPENDIX F (CONTINUED)

-100	11.2181	6.948
-99	11.2838	7.090
-98	11.3495	7.231
-97	11.4151	7.372
-96	11.4806	7.511
-95	11.5461	7.649
-94	11.6115	7.787
-93	11.6768	7.923
-92	11.7421	8.058
-91	11.8074	8.192
-90	11.8726	8.326
-89	11.9377	8.458
-88	12.0028	8.589
-87	12.0678	8.720
-86	12.1328	8.849
-85	12.1977	8.978
-84	12.2626	9.106
-83	12.3274	9.232
-82	12.3922	9.358
-81	12.4569	9.483
-80	12.5216	9.608

APPENDIX F (CONTINUED)

T	F(T)	V
-80	12.5216	0.108
-79	12.5863	0.236
-78	12.6509	0.363
-77	12.7155	0.490
-76	12.7800	0.616
-75	12.8445	0.741
-74	12.9089	0.866
-73	12.9734	0.990
-72	13.0377	1.113
-71	13.1021	1.235
-70	13.1664	1.357
-69	13.2307	1.478
-68	13.2949	1.599
-67	13.3591	1.719
-66	13.4233	1.838
-65	13.4874	1.956
-64	13.5516	2.074
-63	13.6156	2.192
-62	13.6797	2.308
-61	13.7437	2.424
-60	13.8078	2.540
-59	13.8717	2.655
-58	13.9357	2.769
-57	13.9996	2.882
-56	14.0636	2.995
-55	14.1275	3.108
-54	14.1913	3.220
-53	14.2552	3.331
-52	14.3190	3.442
-51	14.3828	3.552
-50	14.4466	3.662
-49	14.5104	3.771
-48	14.5742	3.880
-47	14.6379	3.988
-46	14.7017	4.095
-45	14.7654	4.202
-44	14.8291	4.309
-43	14.8928	4.414
-42	14.9565	4.520
-41	15.0202	4.625
-40	15.0938	4.729

APPENDIX F (CONTINUED)

-39	15.1475	4.833
-38	15.2111	4.937
-37	15.2747	5.040
-36	15.3384	5.142
-35	15.4020	5.244
-34	15.4656	5.346
-33	15.5292	5.447
-32	15.5928	5.547
-31	15.6564	5.647
-30	15.7199	5.747
-29	15.7835	5.846
-28	15.8471	5.945
-27	15.9107	6.043
-26	15.9742	6.141
-25	16.0378	6.239
-24	16.1014	6.336
-23	16.1649	6.432
-22	16.2285	6.528
-21	16.2921	6.624
-20	16.3556	6.719
-19	16.4192	6.814
-18	16.4827	6.909
-17	16.5463	7.003
-16	16.6099	7.096
-15	16.6734	7.190
-14	16.7370	7.282
-13	16.8006	7.375
-12	16.8641	7.467
-11	16.9277	7.559
-10	16.9913	7.650
-9	17.0549	7.741
-8	17.1185	7.831
-7	17.1821	7.921
-6	17.2457	8.011
-5	17.3093	8.100
-4	17.3729	8.189
-3	17.4365	8.278
-2	17.5001	8.366
-1	17.5638	8.454
0	17.6274	8.542

APPENDIX F (CONTINUED)

T	F(T)	V
0	17.6274	0.076
1	17.6910	0.166
2	17.7547	0.256
3	17.8184	0.345
4	17.8820	0.434
5	17.9457	0.522
6	18.0094	0.611
7	18.0731	0.699
8	18.1368	0.786
9	18.2005	0.874
10	18.2642	0.961
11	18.3279	1.048
12	18.3916	1.134
13	18.4553	1.220
14	18.5191	1.306
15	18.5828	1.392
16	18.6466	1.477
17	18.7103	1.562
18	18.7741	1.647
19	18.8378	1.731
20	18.9016	1.815
21	18.9654	1.899
22	19.0292	1.983
23	19.0930	2.066
24	19.1568	2.149
25	19.2206	2.232
26	19.2844	2.314
27	19.3483	2.397
28	19.4121	2.478
29	19.4760	2.560
30	19.5398	2.642
31	19.6037	2.723
32	19.6675	2.803
33	19.7314	2.884
34	19.7953	2.964
35	19.8592	3.044
36	19.9230	3.124
37	19.9869	3.204
38	20.0508	3.283
39	20.1148	3.362
40	20.1787	3.441

APPENDIX F (CONTINUED)

40	20.1787	3.441
41	20.2426	3.519
42	20.3065	3.597
43	20.3705	3.675
44	20.4344	3.753
45	20.4984	3.831
46	20.5623	3.908
47	20.6263	3.985
48	20.6903	4.061
49	20.7543	4.138
50	20.8183	4.214
51	20.8823	4.290
52	20.9463	4.366
53	21.0103	4.441
54	21.0743	4.517
55	21.1383	4.592
56	21.2024	4.666
57	21.2664	4.741
58	21.3304	4.815
59	21.3945	4.889
60	21.4586	4.963
61	21.5226	5.037
62	21.5867	5.110
63	21.6508	5.183
64	21.7149	5.256
65	21.7790	5.329
66	21.8431	5.401
67	21.9072	5.474
68	21.9713	5.546
69	22.0354	5.617
70	22.0996	5.689
71	22.1637	5.760
72	22.2278	5.831
73	22.2920	5.902
74	22.3562	5.973
75	22.4203	6.043
76	22.4845	6.114
77	22.5487	6.184
78	22.6129	6.253
79	22.6771	6.323
80	22.7413	6.392

APPENDIX F (CONTINUED)

81	22.8055	6.461
82	22.8697	6.530
83	22.9339	6.599
84	22.9981	6.668
85	23.0624	6.736
86	23.1266	6.804
87	23.1909	6.872
88	23.2551	6.940
89	23.3194	7.007
90	23.3837	7.074
91	23.4480	7.142
92	23.5122	7.208
93	23.5765	7.275
94	23.6408	7.342
95	23.7052	7.408
96	23.7695	7.474
97	23.8338	7.540
98	23.8981	7.606
99	23.9625	7.671
100	24.0268	7.736
101	24.0912	7.801
102	24.1555	7.866
103	24.2199	7.931
104	24.2842	7.996
105	24.3486	8.060
106	24.4130	8.124
107	24.4774	8.188
108	24.5418	8.252
109	24.6062	8.315
110	24.6706	8.379
111	24.7351	8.442
112	24.7995	8.505
113	24.8639	8.568
114	24.9284	8.631
115	24.9928	8.693
116	25.0573	8.755
117	25.1217	8.817
118	25.1862	8.879
119	25.2507	8.941
120	25.3152	9.003

APPENDIX F (CONTINUED)

121	25.3797	9.064
122	25.4442	9.125
123	25.5087	9.186
124	25.5732	9.247
125	25.6377	9.308
126	25.7022	9.369
127	25.7668	9.429
128	25.8313	9.489
129	25.8958	9.549
130	25.9604	9.609
131	26.0250	9.669
132	26.0895	9.728
133	26.1541	9.787
134	26.2187	9.847
135	26.2833	9.906
136	26.3479	9.964
137	26.4125	10.023
138	26.4771	10.082
139	26.5417	10.140
140	26.6063	10.198

APPENDIX F (CONTINUED)

T	F(T)	V
140	26.6063	0.051
141	26.6710	0.111
142	26.7356	0.172
143	26.8003	0.232
144	26.8649	0.292
145	26.9296	0.352
146	26.9943	0.412
147	27.0589	0.472
148	27.1236	0.531
149	27.1883	0.591
150	27.2530	0.650
151	27.3177	0.709
152	27.3824	0.768
153	27.4471	0.827
154	27.5119	0.886
155	27.5766	0.944
156	27.6413	1.003
157	27.7061	1.061
158	27.7708	1.119
159	27.8356	1.177
160	27.9004	1.235
161	27.9651	1.293
162	28.0299	1.351
163	28.0947	1.408
164	28.1595	1.466
165	28.2243	1.523
166	28.2891	1.580
167	28.3539	1.637
168	28.4188	1.694
169	28.4836	1.751
170	28.5484	1.808
171	28.6133	1.864
172	28.6781	1.921
173	28.7430	1.977
174	28.8079	2.033
175	28.8727	2.089
176	28.9376	2.145
177	29.0025	2.201
178	29.0674	2.257
179	29.1323	2.312
180	29.1972	2.367

APPENDIX F (CONTINUED)

180	29.1972	2.367
181	29.2621	2.423
182	29.3270	2.478
183	29.3920	2.533
184	29.4569	2.588
185	29.5219	2.643
186	29.5868	2.697
187	29.6518	2.752
188	29.7167	2.806
189	29.7817	2.861
190	29.8467	2.915
191	29.9117	2.969
192	29.9767	3.023
193	30.0417	3.077
194	30.1067	3.131
195	30.1717	3.184
196	30.2367	3.238
197	30.3017	3.291
198	30.3668	3.344
199	30.4318	3.398
200	30.4969	3.451
201	30.5619	3.504
202	30.6270	3.556
203	30.6921	3.609
204	30.7571	3.662
205	30.8222	3.714
206	30.8873	3.766
207	30.9524	3.819
208	31.0175	3.871
209	31.0826	3.923
210	31.1478	3.975
211	31.2129	4.027
212	31.2780	4.078
213	31.3432	4.130
214	31.4083	4.181
215	31.4735	4.233
216	31.5386	4.284
217	31.6038	4.335
218	31.6690	4.386
219	31.7342	4.437
220	31.7994	4.488

APPENDIX F (CONTINUED)

221	31.8646	4.538
222	31.9298	4.589
223	31.9950	4.640
224	32.0602	4.690
225	32.1254	4.740
226	32.1907	4.790
227	32.2559	4.840
228	32.3212	4.890
229	32.3864	4.940
230	32.4517	4.990
231	32.5169	5.040
232	32.5822	5.089
233	32.6475	5.139
234	32.7128	5.188
235	32.7781	5.237
236	32.8434	5.286
237	32.9087	5.335
238	32.9740	5.384
239	33.0393	5.433
240	33.1047	5.482
241	33.1700	5.530
242	33.2354	5.579
243	33.3007	5.627
244	33.3661	5.676
245	33.4315	5.724
246	33.4968	5.772
247	33.5622	5.820
248	33.6276	5.868
249	33.6930	5.916
250	33.7584	5.963
251	33.8238	6.011
252	33.8892	6.059
253	33.9547	6.106
254	34.0201	6.153
255	34.0855	6.201
256	34.1510	6.248
257	34.2164	6.295
258	34.2819	6.342
259	34.3474	6.389
260	34.4128	6.435

APPENDIX F (CONTINUED)

261	34.4783	6.482
262	34.5438	6.529
263	34.6093	6.575
264	34.6748	6.621
265	34.7403	6.668
266	34.8058	6.714
267	34.8713	6.760
268	34.9369	6.806
269	35.0024	6.852
270	35.0680	6.898
271	35.1335	6.943
272	35.1991	6.989
273	35.2646	7.035
274	35.3302	7.080
275	35.3958	7.125
276	35.4614	7.171
277	35.5270	7.216
278	35.5926	7.261
279	35.6582	7.306
280	35.7238	7.351
281	35.7894	7.396
282	35.8551	7.440
283	35.9207	7.485
284	35.9863	7.530
285	36.0520	7.574
286	36.1176	7.618
287	36.1833	7.663
288	36.2490	7.707
289	36.3147	7.751
290	36.3803	7.795
291	36.4460	7.839
292	36.5117	7.883
293	36.5774	7.927
294	36.6432	7.970
295	36.7089	8.014
296	36.7746	8.057
297	36.8404	8.101
298	36.9061	8.144
299	36.9718	8.187
300	37.0376	8.230

APPENDIX F (CONTINUED)

301	37.1034	8.274
302	37.1691	8.317
303	37.2349	8.359
304	37.3007	8.402
305	37.3665	8.445
306	37.4323	8.488
307	37.4981	8.530
308	37.5639	8.573
309	37.6297	8.615
310	37.6956	8.657
311	37.7614	8.700
312	37.8272	8.742
313	37.8931	8.784
314	37.9589	8.826
315	38.0248	8.868
316	38.0907	8.910
317	38.1566	8.952
318	38.2224	8.993
319	38.2883	9.035
320	38.3542	9.076
321	38.4201	9.118
322	38.4860	9.159
323	38.5520	9.200
324	38.6179	9.242
325	38.6838	9.283
326	38.7498	9.324
327	38.8157	9.365
328	38.8817	9.406
329	38.9476	9.446
330	39.0136	9.487
331	39.0796	9.528
332	39.1456	9.568
333	39.2115	9.609
334	39.2775	9.649
335	39.3436	9.690
336	39.4096	9.730
337	39.4756	9.770
338	39.5416	9.810
339	39.6076	9.850
340	39.6737	9.890

APPENDIX F (CONTINUED)

T	R(T)	V
340	39.6737	0.034
341	39.7397	0.076
342	39.8058	0.117
343	39.8718	0.158
344	39.9379	0.200
345	40.0040	0.241
346	40.0701	0.282
347	40.1362	0.323
348	40.2023	0.364
349	40.2684	0.405
350	40.3345	0.446
351	40.4006	0.487
352	40.4667	0.528
353	40.5328	0.569
354	40.5990	0.610
355	40.6651	0.650
356	40.7313	0.691
357	40.7974	0.731
358	40.8636	0.772
359	40.9298	0.812
360	40.9960	0.852
361	41.0621	0.893
362	41.1283	0.933
363	41.1945	0.973
364	41.2608	1.013
365	41.3270	1.053
366	41.3932	1.093
367	41.4594	1.133
368	41.5257	1.173
369	41.5919	1.213
370	41.6582	1.252
371	41.7244	1.292
372	41.7907	1.332
373	41.8570	1.371
374	41.9232	1.411
375	41.9895	1.450
376	42.0558	1.489
377	42.1221	1.529
378	42.1884	1.568
379	42.2547	1.607
380	42.3211	1.646

APPENDIX F (CONTINUED)

381	42.3874	1.685
382	42.4537	1.724
383	42.5201	1.763
384	42.5864	1.802
385	42.6528	1.841
386	42.7191	1.880
387	42.7855	1.918
388	42.8519	1.957
389	42.9183	1.996
390	42.9847	2.034
391	43.0511	2.073
392	43.1175	2.111
393	43.1839	2.149
394	43.2503	2.188
395	43.3167	2.226
396	43.3832	2.264
397	43.4496	2.302
398	43.5161	2.340
399	43.5825	2.378
400	43.6490	2.416
401	43.7155	2.454
402	43.7819	2.492
403	43.8484	2.530
404	43.9149	2.568
405	43.9814	2.605
406	44.0479	2.643
407	44.1144	2.680
408	44.1810	2.718
409	44.2475	2.755
410	44.3140	2.793
411	44.3806	2.830
412	44.4471	2.868
413	44.5137	2.905
414	44.5802	2.942
415	44.6468	2.979
416	44.7134	3.016
417	44.7800	3.053
418	44.8466	3.090
419	44.9132	3.127
420	44.9798	3.164

APPENDIX F (CONTINUED)

421	45.0464	3.201
422	45.1130	3.237
423	45.1796	3.274
424	45.2462	3.311
425	45.3129	3.347
426	45.3795	3.384
427	45.4462	3.420
428	45.5129	3.457
429	45.5795	3.493
430	45.6462	3.529
431	45.7129	3.566
432	45.7796	3.602
433	45.8463	3.638
434	45.9130	3.674
435	45.9797	3.710
436	46.0464	3.746
437	46.1131	3.782
438	46.1799	3.818
439	46.2466	3.854
440	46.3133	3.890
441	46.3801	3.926
442	46.4469	3.961
443	46.5136	3.997
444	46.5804	4.032
445	46.6472	4.068
446	46.7140	4.104
447	46.7808	4.139
448	46.8476	4.174
449	46.9144	4.210
450	46.9812	4.245
451	47.0480	4.280
452	47.1148	4.315
453	47.1817	4.351
454	47.2485	4.386
455	47.3154	4.421
456	47.3822	4.456
457	47.4491	4.491
458	47.5160	4.525
459	47.5829	4.560
460	47.6498	4.595

APPENDIX F (CONTINUED)

461	47.7166	4.630
462	47.7836	4.664
463	47.8505	4.699
464	47.9174	4.734
465	47.9843	4.768
466	48.0512	4.803
467	48.1182	4.837
468	48.1851	4.872
469	48.2521	4.906
470	48.3190	4.940
471	48.3860	4.974
472	48.4530	5.009
473	48.5199	5.043
474	48.5869	5.077
475	48.6539	5.111
476	48.7209	5.145
477	48.7879	5.179
478	48.8549	5.213
479	48.9220	5.247
480	48.9890	5.280
481	49.0560	5.314
482	49.1231	5.348
483	49.1901	5.382
484	49.2572	5.415
485	49.3242	5.449
486	49.3913	5.482
487	49.4584	5.516
488	49.5255	5.549
489	49.5926	5.583
490	49.6597	5.616
491	49.7268	5.649
492	49.7939	5.683
493	49.8610	5.716
494	49.9281	5.749
495	49.9953	5.782
496	50.0624	5.815
497	50.1296	5.848
498	50.1967	5.881
499	50.2639	5.914
500	50.3311	5.947

APPENDIX F (CONTINUED)

501	50.3982	5.980
502	50.4654	6.013
503	50.5326	6.045
504	50.5998	6.078
505	50.6670	6.111
506	50.7342	6.143
507	50.8014	6.176
508	50.8687	6.208
509	50.9359	6.241
510	51.0032	6.273
511	51.0704	6.306
512	51.1377	6.338
513	51.2049	6.370
514	51.2722	6.402
515	51.3395	6.435
516	51.4067	6.467
517	51.4740	6.499
518	51.5413	6.531
519	51.6086	6.563
520	51.6759	6.595
521	51.7433	6.627
522	51.8106	6.659
523	51.8779	6.691
524	51.9453	6.723
525	52.0126	6.754
526	52.0800	6.786
527	52.1473	6.818
528	52.2147	6.849
529	52.2821	6.881
530	52.3495	6.913
531	52.4168	6.944
532	52.4842	6.976
533	52.5516	7.007
534	52.6191	7.038
535	52.6865	7.070
536	52.7539	7.101
537	52.8213	7.132
538	52.8888	7.163
539	52.9562	7.195
540	53.0237	7.226

APPENDIX F (CONTINUED)

541	53.0911	7.257
542	53.1586	7.288
543	53.2261	7.319
544	53.2936	7.350
545	53.3610	7.381
546	53.4285	7.412
547	53.4960	7.443
548	53.5635	7.473
549	53.6311	7.504
550	53.6986	7.535
551	53.7661	7.565
552	53.8337	7.596
553	53.9012	7.627
554	53.9688	7.657
555	54.0363	7.688
556	54.1039	7.718
557	54.1715	7.749
558	54.2390	7.779
559	54.3066	7.809
560	54.3742	7.840
561	54.4418	7.870
562	54.5094	7.900
563	54.5770	7.930
564	54.6447	7.960
565	54.7123	7.991
566	54.7799	8.021
567	54.8476	8.051
568	54.9152	8.081
569	54.9829	8.111
570	55.0505	8.141
571	55.1182	8.170
572	55.1859	8.200
573	55.2536	8.230
574	55.3213	8.260
575	55.3890	8.289
576	55.4567	8.319
577	55.5244	8.349
578	55.5921	8.378
579	55.6598	8.408
580	55.7276	8.437

APPENDIX F (CONTINUED)

581	55.7953	8.467
582	55.8631	8.496
583	55.9308	8.526
584	55.9986	8.555
585	56.0664	8.584
586	56.1341	8.614
587	56.2019	8.643
588	56.2697	8.672
589	56.3375	8.701
590	56.4053	8.730
591	56.4731	8.760
592	56.5410	8.789
593	56.6088	8.818
594	56.6766	8.847
595	56.7445	8.876
596	56.8123	8.904
597	56.8802	8.933
598	56.9480	8.962
599	57.0159	8.991
600	57.0838	9.020

REFERENCES

[1] G. AKTAŞ, "Hazırlama Koşullarının Amorf Silisyumun Elektronik Özellikleri Üzerindeki Etkileri", Türk Fizik Derneği, IV. Fizik Kongresi Tebliği, 1982.

[2] E.R.G. ECKERT and R.J. GOLDSTEIN, Measurements in Heat Transfer, McGraw-Hill, 1976.

[3] R.J. BERRY, "The Stability of Platinum Resistance Thermometers at Temperatures up to 630 °C", Temperature, Its Measurement and Control in Science and Industry, C.M. Hertzfeld, ed.-in-Chief, Vol. III, Part 2, Reinhold, 1962.

[4] R.P. BENEDICT, Fundamentals of Temperature, Pressure, and Flow Measurements, John Wiley and Sons, 1977.

[5] P.A. KINZIE, Thermocouple Temperature Measurement, Wiley-Interscience, 1973.

[6] W.K. ROOTS, Fundamentals of Temperature Control, Academic Press, 1969.

[7] E.T. DAVIS and E.D. MOILES, "Electrical Systems for Temperature Measurement and Control", Temperature, Its measurement and Control in Science and Industry, C.M. Hertzfeld, ed.-in-Chief, Vol. III, Part 2, Reinhold, 1962.

[8] M. KUTZ, Temperature Control, John Wiley and Sons 1968.

[9] J.D. LENK, Manual for Operational Amplifier Users, Reston Publishing Company, 1976.

[10] J.G. GRAEME, G.E. TOBEY and L.P. HUELSMAN, Operational Amplifiers, Design and Applications, McGraw-Hill, 1971.

[11] H.V. MALMSTADT, C.G. ENKE and S.R. CROUCH, Control of Electrical Quantities in Instrumentation, W.A. Benjamin, Inc., 1973.